DEPARTMENT OF THE NAVY
SPACE AND NAVAL WARFARE SYSTEMS COMMAND
WASHINGTON, D.C. 20363-5100

SPAWARINST 4130.1A
SPAWAR 003-4
22 April 1988

SPAWAR INSTRUCTION 4130.1A

From: Commander, Space and Naval Warfare Systems Command

Subj: SPAWAR CONFIGURATION MANAGEMENT (CM) POLICY AND PROCEDURES

Ref: (a) DOD Directive 5010.19 of 28 Oct 87
(b) SECNAVINST 4130.2 of 11 May 87

Encl: (1) SPAWARINST 4130-1M SPAWAR Configuration Management Manual

1. Purpose. To establish policy, requirements, and procedures and assign responsibilities for CM of SPAWAR hardware and software.

2. Cancellation. This instruction cancels and supersedes NAVELEXINST 4130.1, NAVELEXINST 4130.9, NAVELEXINST 5420.5, and NAVELEXINST 4720.5.

3. Background. References (a) and (b) establish uniform requirements for the application and tailoring of CM for material items which are acquired, operated or supported by the Department of the Navy (DoN). This instruction promulgates SPAWAR CM policy, practices and procedures which carry out the precepts and requirements of references (a) and (b).

4. Scope. Applies to SPAWARSYSCOM headquarters and its activities and pertains to all hardware and software under SPAWAR cognizance, and all contractors to the extent contractually invoked.

5. Objectives

a. Assist management in achieving required item performance, operational efficiency, logistics support, and readiness by establishing policy for the appropriate level of configuration identification, control, reviews/audits, and status accounting. This applies to all items under the cognizance of SPAWAR HQ, activities, and inventory control points performing work for SPAWAR.

b. Obtain maximum efficiency in the management of necessary engineering changes with respect to cost, processing, content evaluation, implementation, and recording.

c. Provide SPAWAR policy relating to CM.

6. Policy

a. Configuration management policy, requirements and procedures contained in this instruction shall be strictly applied and enforced for all SPAWAR hardware and software throughout its life cycle.

b. A configuration management plan, both contractor and office of primary responsibility (OPR), shall be initiated prior to Milestone II and maintained throughout the life cycle, for all SPAWAR cognizant hardware and software.

c. Configuration management provisions shall be included in all contracts and in-house (including field activity) equivalents for the development, production, and modification of all SPAWAR hardware and software.

d. Selection of a non-development item (NDI) to satisfy a procurement and/or operational requirement in no way relieves project personnel of their responsibilities to invoke SPAWAR CM policies and procedures.

e. Design disclosure documentation, as tailored to a particular acquisition, shall be procured, approved and maintained current throughout the life cycle of SPAWAR hardware and software.

f. After establishment of each formal baseline, strict configuration change control shall be rigorously exercised throughout the life cycle of the hardware and software.

g. Proposed changes (ECP, alteration, and field change) to an approved SPAWAR hardware and software configuration item shall be held to an absolute minimum. All proposed changes shall be thoroughly reviewed and evaluated as to total impact (e.g., cost, schedule, equipment life, technical feasibility, training, maintenance, logistic support, etc.) and only those proposed changes that provide a positive advantage shall be considered for approval. Proposed changes for which funds are not available to implement the change and provide the required technical and logistic support after implementation shall not be approved.

h. Compliance and conformance to CM policy, requirements and procedures shall be confirmed and validated through scheduled program management and logistics reviews.

i. Systems shall be developed to provide and maintain configuration status accounting data (CSA) for SPAWAR hardware and software.

j. The degree of CM applied to SPAWAR hardware and software shall be appropriately tailored to be consistent with the item's complexity, size, quantity, intended use, mission criticality and life cycle phase.

7. Responsibilities

a. SPAWAR 003

(1) Develop, for COMSPAWAR approval, CM policy, requirements, and procedures for configuration identification, reviews/audits, control, and status accounting.

(2) Review and monitor implementation of PD/PMW configuration management systems, plans and procedures for conformance with SPAWAR policies, procedures and requirements of this instruction.

(3) Provide technical and management direction for administrative requirements to carry out CM (ECP Tracking System and Field Change Implementation (FCIP) Data Base) within SPAWAR for uniform tracking of alterations, engineering change proposals and field changes for SPAWAR hardware and software (e.g., assignment of CCB and FC numbers, status of changes, configuration status).

(4) Liaison with ashore and afloat activities to monitor the effectiveness of the SPAWAR CM program and its procedures.

(5) Monitor SPAWAR CSA system requirements for hardware and software deployed in ashore and afloat activities.

(6) Coordinate the assignment of nomenclature, Equipment Identification Code (EIC) coding and serialization to all hardware at the unit level and above.

(7) Provide technical and management direction for storage of reproducible copies of technical design disclosure and other documentation needed for acquisition, maintenance, repair and operational use of all SPAWAR hardware and software.

b. PMW

(1) Establish and implement life cycle CM of parts, equipments, subsystems and systems under his cognizance. This responsibility includes those equipments currently deployed, in production or under development.

(2) Determine and specify the appropriate design disclosure and other documents, including changes thereto, that will apply to all procurements and reprocurements of hardware, software, and repair parts, using tailoring and streamlining practices specified by COMSPAWAR.

(3) Procure design disclosure documentation, and ensure its completeness, adequacy, content and scope prior to acceptance.

(4) Maintain the design disclosure, and associated documents, in an up-to-date status and incorporate all approved design changes (field changes, engineering changes, or any other type of approved design change) into this documentation, for the entire life of the hardware and software.

(5) Select and manage a design agent, either contractor or government activity, to provide support throughout the life of the hardware. This includes, but is not limited to, evaluating design problems and changes, proposing changes, and maintaining baseline design disclosure documentation.

(6) Select and manage a Software Support Activity (SSA) to provide support throughout the life of the software.

(7) Initiate, prepare, justify and review proposed changes to hardware/software, proof the change to ensure technical acceptability, and ensure that all integrated logistics support documentation and material are available prior to accomplishment of the change. Additionally, ensure change effectivity encompasses all appropriate requirements (repair parts, technical manuals, spares, etc.) and activities (e.g., trainers and shore activities, etc.) prior to approval.

(8) Maintain CSA data for cognizant hardware and software that is in development, production, or deployment.

(9) Budget for and contractually implement all requirements for assigned field change accomplishment. Develop, proof, procure and deliver all field change material and kits, documentation, and logistics support.

(10) Ensure the appropriate provisions of this instruction and manual are contractually invoked.

c. PD

(1) Ensure establishment of internal procedures for compliance with the policies, procedures and requirements of this instruction and the enclosed manual, including internal

procedures to ensure only changes that provide a positive advantage are approved and that no unauthorized changes are made.

(2) Establish a Change Control Board (CCB) to review and approve/disapprove proposed changes to hardware/software.

8. Action. It is intended that all requirements of this instruction be implemented as soon as possible. However, it is recognized that there are certain provisions that cannot be done immediately. A concentrated effort will be made by all concerned to effectively apply the requirements of enclosure (1) in a pragmatic and timely fashion. Each PD will provide, within 90 days of the date of this instruction, a proposed implementation plan to SPAWAR 00, via SPAWAR 003, which:

a. describes in brief, narrative form the intended method of implementation;

b. identifies any provisions that cannot be implemented immediately and a timeframe for their implementation; and

c. describes any issues or problems with fulfillment of all requirements of this instruction and its enclosure.

Glenwood Clark

GLENWOOD CLARK

Distribution:
SPAWAR List 3

SNDL PART II (2 copies)
FKQ (SPAWAR Activities)

Copy to:
SNDL PART II
C84B (NAVMATDATASYSGRU)
FKA1 (Systems Commands)
FR10 (SPAWAR Reserve Units Only)

Stocked
SPAWAR 18-511 (10 copies)
SPAWAR 003-444 (55 copies)

TABLE OF CONTENTS

CHAPTER 1
GENERAL GUIDANCE

Paragraph	Title	Page
1.1	Purpose	1-1
1.2	Scope	1-1
1.3	Application	1-2
1.4	Contractual Requirements and Provisions	1-2
1.5	Configuration Management Planning	1-3
1.5.1	Purpose	1-3
1.5.2	Application	1-3
1.5.3	Objectives	1-4
1.5.4	Implementation	1-5
1.5.5	Planning Coordination	1-6
1.6	Software Configuration Management	1-12
1.7	Joint Configuration Management	1-12
1.8	Major and Less Than Major Systems	1-13
1.9	Other Equipment (Low Dollar Value or Lesser Mission/Design Precedence)	1-14
1.10	Applicable References, Definitions, and Acronyms	1-14
1.11	Responsibilities	1-14

CHAPTER 2
CONFIGURATION IDENTIFICATION

Paragraph	Title	Page
2.1	General	2-1
2.2	Responsibilities	2-1
2.2.1	Program Director/Program Manager Warfare	2-1
2.2.2	Acquisition and Logistics Planning Directorate (003)	2-7
2.3	Application	2-8
2.3.1	General	2-8
2.3.2	Computer Software	2-6
2.3.3	Non-Development Items	2-9
2.3.4	Design Disclosure Package	2-10
2.3.5	Warfare System Definition	2-11

2.4	Baseline Management	2-12
2.4.1	General	2-12
2.4.2	Configuration Identification Compatibility	2-14
2.4.3	Baseline Establishment	2-15
2.4.4	Interface Documentation	2-15
2.5	Implementation	2-15
2.5.1	Functional Configuration Identification/ Functional Baseline General Requirements	2-15
2.5.2	Allocated Configuration Identification Allocated Baseline General Requirements	2-19
2.5.3	Product Configuration Identification/ Product Baseline General Requirements	2-21
2.6	Configuration Record	2-26
2.7	Assignment of Military Nomenclature	2-27
2.7.1	Nomenclature Assignment Processing	2-27
2.8	Configuration Item Marking, Numbering and Serialization	2-27
2.8.1	Marking	2-27
2.8.2	Part Numbers	2-27
2.8.3	Serialization, Lot Numbers, Stock Numbers	2-27
2.8.4	Reidentification	2-28
2.9	Software Identification	2-28

CHAPTER 3
TECHNICAL REVIEWS

Paragraph	Title	Page
3.1	General	3-1
3.2	Responsibilities and Objectives	3-1
3.2.1	Responsibilities	3-1
3.2.2	Objectives	3-2
3.3	Guidance for Conducting Reviews	3-3
3.3.1	Scheduling of Reviews	3-3
3.3.2	Procedures	3-3
3.4	Types of Technical Reviews	3-3

CHAPTER 4
CONFIGURATION AUDITS

Paragraph	Title	Page
4.1	General	4-1
4.2	Responsibilities	4-1
4.2.1	Program Director/Program Manager Warfare	4-1
4.3	Guidance for Conducting Audits	4-2
4.3.1	Functional Configuration Audit Scheduling	4-2
4.3.2	Physical Configuration Audit Scheduling	4-2
4.3.3	Functional Configuration Audit Procedures and Preparation	4-2
4.3.4	Physical Configuration Audit Procedures and Preparation	4-4
4.3.5	Non-Development Items	4-7
4.3.6	Follow-on Configuration Audits	4-7

CHAPTER 5
CONFIGURATION CONTROL

Paragraph	Title	Page
5.1	General	5-1
5.2	Responsibilities	5-1
5.2.1	Program Director/Program Manager Warfare Configuration Control Responsibilities	5-1
5.2.2	SPAWAR 003 Configuration Control Responsibilities	5-3
5.3	Engineering Change Proposal Classification	5-4
5.4	Process Flowcharts	5-4
5.5	Pre-Proposal Phase	5-5
5.5.1	General	5-5
5.5.2	Preparation	5-5
5.5.3	Processing	5-5
5.6	Proposal Phase	5-5
5.6.1	General	5-5
5.6.2	Preparation	5-6
5.6.3	Prototype Design and Fabrication	5-6
5.6.4	Prototype Testing	5-6

5.6.5	Prototype Proofing	5-7
5.6.6	Technical and Operational Evaluations	5-7
5.6.7	Field Change Classification	5-8
5.6.8	Prototype Approval	5-9
5.6.9	Final Engineering Change Proposal Preparation	5-10
5.6.10	Processing	5-10
5.7	Configuration Control Boards	5-10
5.7.1	General	5-10
5.7.2	Preparation for Configuration Control Board Action	5-12
5.7.3	Configuration Control Board Request/Directive	5-15
5.7.4	Configuration Control Board Request/Directive Processing Time	5-16
5.7.5	Configuration Control Board Responsibilities	5-16
5.7.6	Configuration Control Board Action	5-17
5.7.7	Pricing of Changes	5-17
5.7.8	Cancellation of Configuration Control Board Approved Changes	5-18
5.7.9	Configuration Control Board Change Request/Directive Revisions and Distribution	5-18
5.7.10	Records and Files	5-18
5.7.11	Sample Configuration Control Board Organizational Structure	5-18
5.8	Processing, Review and Approval of Deviations and Waivers	5-19
5.8.1	Major/Critical Deviations and Waivers	5-20
5.8.2	Minor Deviations and Waivers	5-20
5.8.3	Delegation of Approval Authority	5-20
5.9	Production Phase	5-20
5.9.1	Field Change Production	5-20
5.9.2	Field Change Bulletin Preparation	5-21
5.9.3	Field Change Bulletin Processing Procedures	5-22
5.9.4	Engineering Information Bulletin Field Change Articles	5-24
5.9.5	Engineering Information Bulletin Field Change Approval	5-24
5.9.6	Packaging, Marking and Shipping Preparation	5-25
5.10	Certification	5-25
5.10.1	General	5-25
5.10.2	Procedures	5-25
5.11	Field Change Bulletin Distribution	5-27

5.12	Accomplishment Phase	5-27
5.12.1	General	5-27
5.12.2	Implementation	5-27
5.12.3	Field Change Accomplishment	5-27
5.12.4	Production Change Accomplishment	5-38

CHAPTER 6
CONFIGURATION STATUS ACCOUNTING

Paragraph	Title	Page
6.1	General	6-1
6.2	Objective	6-1
6.3	Responsibilities	6-1
6.3.1	Program Director/Program Manager Warfare Configuration Status Accounting Responsibilities	6-1
6.3.2	SPAWAR 003 Configuration Status Accounting Responsibilities	6-2
6.4	Implementation	6-3
6.4.1	SPAWAR Configuration Information Management System	6-3
6.4.2	SPAWAR Configuration Information Management System Phase I	6-3
6.4.3	SPAWAR Configuration Information Management System Phase II	6-5
6.5	Configuration Status Accounting/SPAWAR Configuration Information Management System	6-5

FIGURES

Figure		Page
2-1	Documentation Requirements for Hardware/ Software Development	2-3
2-2	System Development Cycle	2-4
2-3	Life Cycle Configuration Identification and Baselines	2-5
2-4	Warfare System Definition Flow Chart	2-13
2-5	Functional Configuration Identification Source and Support Data	2-18
2-6	Allocated Configuration Identification Source and Support Data	2-20
2-7	Product Configuration Identification Source and Support Data	2-22
5-1	Sample Decision Memorandum	5-11
5-2	Sample Engineering Change Proposal Checklist	5-13
5-3	System Safety Assessment Form	5-14
5-4	Field Change Bulletin (FCB) Processing	5-23
5-5	Sample Certification Form	5-26

List of Appendices

Appendix	Title	Page
A	Reference Documents	A-1
B	Definitions	B-1
C	Acronyms	C-1
D	Process Flowcharts	D-1
E	Configuration Control Board Change Request/Directives Instructions	E-1
F	Field Change Bulletins	F-1
G	Field Change Installation Program Forms	G-1
H	OPNAV 4790/CK and 4790/2K Forms	H-1
I	Field Change Installation Program and Instructions and Preparation for SAR	I-1

THIS PAGE INTENTIONALLY LEFT BLANK

1.0 GENERAL GUIDANCE

1.1 Purpose. The Space and Naval Warfare Systems Command (SPAWAR) Configuration Management (CM) Manual is to provide all SPAWAR activities with a single, comprehensive publication, detailing CM policies and procedures in accordance with SECNAVINST 4130.2 and SPAWARINST 5200.23. CM as defined in SECNAVINST 4130.2 is to provide a systematic means for documenting and controlling the configuration of material items so that life-cycle costs, contract requirements, schedules, operational performance and readiness and Integrated Logistic Support (ILS) can be regulated.

1.2 Scope. The application of CM shall be an integral part of any system developed and managed by SPAWAR. CM shall be carefully tailored to reflect the complexity, quantity, size, scope, acquisition phase, and logistic strategies of Configuration Items/ Computer Software Configuration Items (CI/CSCIs) being developed or managed. Configuration Management is a discipline for the systematic application of technical and administrative direction and surveillance to accomplish:

a. Identification and documentation of functional and physical characteristics of components, equipments, computer software, and facilities (Configuration Identification).

b. Monitoring of design efforts to ensure that the development of configuration items has reached specified milestone requirements (Technical Reviews).

c. Comparison of actual functional and physical characteristics to specified characteristics and documentation (Configuration Audits (CAs)).

d. Control of changes to those characteristics (Configuration Control).

e. Recording, reporting, and documentation of changes to any baseline (Configuration Status Accounting (CSA)).

NOTE: CAs and Technical Reviews are defined as elements of CM because of their importance to the development and verification of the CI/CSCI and its documentation. In regard to Technical Reviews, this manual addresses only CM's role in the technical review process.

1.3 Application. CM requirements shall be explicitly defined in all contractual provisions. This shall include requirements for software CM and joint program (inter-, intra-service and international) CM procedures. The requirements of this Manual shall apply to both hardware and software CI/CSCIs for all of the following:

a. Major defense systems (SECNAVINST 5000.1).

b. Other designated systems (less than major programs).

c. Selected end item/prime equipments for reason of system integration or interface control.

d. Software developmental efforts.

For CIs, this application shall encompass space and surface vehicles, electronic installations and facilities, and equipments (i.e., vehicles and radio, sonar, radar sets). For CSCIs, this application shall include programs, modules, routines, system interfaces, output reporting, and data bases.

1.4 Contractual Requirements and Provisions. In order to initiate and exercise effective CM, contracts for CI/CSCIs shall include the following as deliverable items:

a. CM plans and revisions in accordance with MIL-STD-1456 and DoD-STD-2167.

b. Configuration control procedures in accordance with DOD-STD-480/MIL-STD-481 and DoD-STD-2167.

c. CSA reports in accordance with MIL-STD-482 and DoD-STD-2167.

d. Technical Reviews and CAs in accordance with MIL-STD-1521 and DoD-STD-2167.

Contracts for follow-on procurement shall specify the configuration of the CI/CSCI (Product Baseline (PBL) and approved changes thereto) to be procured. The requirements shall be tailored to be consistent with the scope and life-cycle phase of the item involved. Tailoring guidance is provided in this Manual to assist in formulating the appropriate CM requirements.

1.5 Configuration Management Planning

1.5.1 Purpose. Planning for CM is to provide the government and industry with a thorough appreciation of the complexity, or simplicity, of the CM program needed for each CI/CSCI under their management responsibility. Documenting this required planning effort not only provides the government and industry with needed planning information, but the resultant CM plans also serve as instructional devices for defining specific CM responsibilities, procedures and practices. In addition, the CM plans provide management with a tool for monitoring and reviewing the program.

1.5.2 Application

1.5.2.1 Configuration Management Plans. CM plans are the means by which the Program Director/Program Manager Warfare (PD/PMW) and the contractor document the details of their respective coordinated CM programs. Initially, CM plans shall provide planning and procedural information. As the CI/CSCI progresses through the various phases of its life cycle, the content of the CM plans shall be revised to reflect refined and updated planning and procedural information. Outdated CM plans shall be retained for historical purposes.

A CM plan may address more than one CI/CSCI provided the purpose and objectives for having CM plans can be met. A CI/CSCI allocated from a higher level CI/CSCI may have a separate CM plan provided it is compatible with the CM plan of the higher level CI/CSCI. Care must be taken to ensure that duplication is kept to a minimum. The CM plans shall be extensions of this manual and the Department of Defense (DoD) standardization documents referenced herein.

The CM plans shall identify the CI/CSCIs and their relationship to operational or mission requirements, and the details of CM application, tailoring, tasks, participants and their roles, products, locations, schedules, milestone charts, related programs (e.g., reliability, maintainability, Quality Assurance (QA), ILS, systems engineering, test and evaluation programs, etc.), as well as other CM programs of allocated and related CI/CSCIs. Implementing procedures pertinent to each element of CM shall be specified as they affect the CI/CSCI, its configuration identification, the government and industry. The CM plans shall not redefine, reiterate or paraphrase this manual or the DoD standardization documents referenced herein, nor shall they be general in nature. DoD and industry standards may be referenced in the CM plans, but in sufficient detail to avoid non-uniform practices, misunderstandings, and a lack of proper government control, while at the same time refraining from unnecessary duplication.

1.5.2.2 Program Director/Program Manager Warfare's Configuration Management Plan. Application of the PD/PMW's CM plan(s) is generally for in-house use and shall be prepared in accordance with this manual. This plan will serve as a management tool for both the PD/PMW and higher authority. This plan may also be used as a contract exhibit, requiring the contractor's CM program to be compatible with the PD/PMW's.

1.5.2.3 Contractor's Configuration Management Plan. The PD/PMW will acquire a CM plan from the contractor during the solicitation process. The contractor's CM plan shall then be used to assess the contractor's ability to satisfy contract CM requirements. The negotiated CM plan may then be invoked in the contract prior to contract award. The contractor's CM plan shall be prepared in accordance with MIL-STD-1456, tailored to be consistent with total program needs and the requirements of this manual.

1.5.2.4 Configuration Management Interface Agreements. When the CM responsibilities of a CI/CSCI involve more than one PD/PMW, the interfacing CM responsibilities, practices and procedures of each PD/PMW shall be documented by interface agreements. The agreements are to be identified in the appropriate PD/PMW's CM plan(s). When more than one contractor is involved in the development or production of a CI/CSCI or group of CI/CSCIs which will be integrated as a higher level CI/CSCI, the PD/PMW shall address appropriate requirements for a contractor's interface working group in each related contract.

1.5.2.5 Configuration Management Elements. All five elements of CM (i.e., configuration identification, control, status accounting, audits, and technical reviews) shall be applied to each CI/CSCI. The degree, level, phasing and intensity in which each element is applied shall be determined by the tailoring process based upon the total program needs.

1.5.3 Objectives. The objectives of planning for CM are to:

a. Maximize the benefits derived from management by objectives.

b. Minimize the risks associated with little or no planning.

c. Enhance the planning and implementation of the development, test and evaluation, production, ILS and operations of the CI/CSCI and its configuration identification.

d. Achieve optimum programming, budgeting, application and tailoring of CM requirements, including the identification of adequate personnel and other program resources required for the performance of CM responsibilities.

e. Establish life-cycle CM requirements for the total program.

f. Ensure that all of the elements of CM are applied in such a manner as to provide a comprehensive life-cycle CM program.

The objectives of documenting the CM planning effort (in CM plans) are to provide a permanent and viable record that will:

a. Assist the program in progressing in an orderly fashion from one phase to the next throughout the life cycle of the CI/CSCI.

b. Facilitate turnover procedures when the personnel involved in the program are changed.

c. Enhance the review process(es) for the activities responsible for reviewing, monitoring, evaluating and/or approving the program's planning, implementation, progress, and status.

d. Provide for a continuity of effort and understanding between the PD/PMW and the contractor, test and evaluation activities, ILS managers, operating forces, and the various other PD/PMWs which may be responsible for allocating, integrating, and interfacing related CI/CSCIs.

1.5.4 Implementation. CM planning shall start during the Concept Exploration/Definition phase and will be documented in CM Plans. It must be recognized that the need for CM covers the life cycle of the CI/CSCIs, realizing that CM requirements (e.g., configuration control) will generally increase as the design matures and passes from one acquisition phase to the next.

1.5.4.1 Program Director/Program Manager Warfare's CM Plan. Implementation of CM planning shall be documented in the form of interface agreements between PD/PMWs, resulting in at least one CM plan. Implementation of CM shall be conducted in accordance with the approved CM plans and interface agreements. The CM plan shall be written by the PMW, reviewed by SPAWAR 003, approved by the PD and maintained by the PMW. This plan shall be known as the PMW's CM plan. The PD/PMW's CM plan shall be written to the highest CI/CSCI level practicable. This plan is to delineate the overall government CM strategy, procedures, milestones, schedules, organizational interaction, etc., applicable to the CI/CSCI and all allocated and interfacing CI/CSCIs. If an allocated CI/CSCI is designated for separate management, a separate CM plan may be used for that CI/CSCI. If a separate CM plan is used, it shall be approved by both PDs and be consistent with the higher level CM plan. The PD/PMWs are to coordinate their CM plans to minimize

duplicate data and assure consistency. If a separate CM plan is not used, the higher level CM plan shall have enough detail to properly address the allocated CI/CSCIs. The PMW's CM Plan shall be consistent with the Computer Resources Life Cycle Management Plan (CRLCMP).

1.5.4.2 Contractor's Configuration Management Plan. The contractor's plan shall be stipulated in the Government's solicitation. This plan shall be written by the contractor, evaluated by both the PD/PMW and SPAWAR 003, used in the government's source selection process, approved and monitored by the PD/PMW, and implemented and maintained current by the contractor. This plan shall be known as the contractor's CM plan. The contractor's CM plan shall include the CM responsibilities, requirements and procedures of the contractor, participating subcontractors and vendors, and how they will satisfy the CM requirements of the contract.

1.5.4.3 Planning Initiation. Planning for CM shall be initiated as soon as possible in the life cycle of the CI/CSCI. The PMW's CM plan will be written and approved prior to entering the initial acquisition phase (by Milestone II). The contractor's CM plan shall be a part of the response to the PD/PMW's request for proposals or bids. Interface agreements between PD/PMWs shall be made as an integral part of the allocation process and as the interfacing PD/PMW(s) are designated.

1.5.4.4 Planning Updates. The PD/PMW's CM plan shall be updated and approved as part of the acquisition planning and decision process prior to entering each succeeding acquisition phase, and prior to the CI/CSCI entering the Operations Support phase. When required, the contractor's CM plan shall be updated and approved in accordance with contract negotiations for each succeeding request for proposals or bids. Updates of the contractor's CM plan in succeeding acquisition phases are appropriate when changes to the CM requirements are minor and the contractor is the same. Otherwise, a new contractor's CM plan shall be required. Additionally, each CM plan and interface agreement shall be updated whenever their contents do not depict the current situation or planning. Amendments may take the form of simple change notices or complete document revisions.

1.5.5 Planning Coordination

1.5.5.1 Program Director/Program Manager Warfare and Contractor Configuration Management Plans. Compatibility between the PD/PMW and contractor CM plans shall be achieved through the solicitation, pre-contract award negotiations, and the contract change processes. The PD/PMW's request for proposals or bids shall include CM requirements based on those set forth in the approved PD/PMW CM

plan(s). The solicitation shall require the contractor to submit a CM plan consistent with the PD/PMW's CM plan. The PD/PMW's review of the contractor's CM plan shall ensure that the contractor's approach to CM will meet contract requirements. The contractor's CM plan shall be evaluated, ranked and used in the source selection process. The contractor's CM plan shall be revised as necessary during the pre-contract award negotiations and the final, PD/PMW approved plan shall be invoked in the contract Statement of Work (SOW). Additional contract requirements are to be invoked to provide the means for the PD/PMW to ensure that the contractor's actual CM practices during the life of the contract are consistent with the contractor's approved CM plan. Changes to the contractor's CM plan, after contract award, shall be achieved through the change clause(s) of the contract.

1.5.5.2 Multiple Program Director/Program Manager Warfare Configuration Management Plans. Coordination of the various PD/PMW CM plans shall be orchestrated by the PD/PMW who is responsible for the CI/CSCI at the highest system level. It is incumbent upon each PD/PMW to ensure that their CM plan reflects actual planning and procedures, and is consistent with total program needs. Additional CM plans for allocating, integrating, interfacing or otherwise related CI/CSCIs may be used to facilitate different areas of responsibility; however, the various related CM plans shall be consistent with each other, fully coordinated and bonded by interface agreements between respective PD/PMWs. When a separate PD/PMW is designated for a CI/CSCI which is allocated from a higher level CI/CSCI, the PD/PMW for the higher level CI/CSCI may direct the use of the CM plan of the higher level CI/CSCI or may authorize the PD/PMW of the allocated CI/CSCI to develop and use a separate, but coordinated CM plan. If authorized, the separate CM plan for the allocated CI/CSCI shall be approved by both PD/PMWs. When a separate PD/PMW is designated for a CI/CSCI which is allocated from two or more higher level CI/CSCIs, managed by two or more PD/PMWs, the PD/PMW of the allocated CI/CSCI shall attempt to satisfy the needs of all participating PD/PMWs. If this is not feasible, or a compromise is not attainable at the PD/PMW level, a resolution must be sought from SPAWAR 003.

1.5.5.3 Program Director/Program Manager Warfare's Configuration Management Plan Content. The type of information contained in a PD/PMW's CM plan includes the following:

a. Configuration Management Planning.

(1) Each phase of the CI/CSCI's life cycle, depicting specific schedules, milestones and CM requirements and products of each phase.

(2) The CM organization and how it relates to the total program organization.

(3) Responsibilities and coordination requirements of the CM organization, identified to the appropriate codes, departments, etc.

(4) Outline of pertinent CM contract requirements.

(5) List of interface agreements, including applicable PD/PMWs and CI/CSCIs.

(6) Authorized exceptions to these CM requirements, their justification, and identification of the approving authority.

(7) Special CM security requirements.

b. Configuration Identification.

(1) Application and tailoring of the DoD Standardization documents used for configuration identification purposes, including documentation lists, grouped by configuration baselines (functional, allocated and product) and by name, number, revision and date.

(2) Level and degree of configuration identification.

(3) CI/CSCI identifiers, including specific nomenclatures, designators, hull, and serial numbers, as applicable.

(4) If more than one CI/CSCI is covered, the relationship between CI/CSCIs.

(5) Preparing, controlling, maintaining, storing, and designating custodian and user activities of each configuration identification document.

(6) Process for preparing, numbering, disseminating, maintaining, amending, and storing each configuration identification document and amendments thereto.

(7) Provisions for establishing and maintaining a configuration record, including identification of the record's form (manual and/or automated), content, custodian, location, and requirements for distribution.

(8) Process for integrating the configuration record with the technical review and configuration audit processes, the central data files (the Weapon Systems File (WSF) at Ships Parts Control Center (SPCC)), the Maintenance and Material Management

(3-M) change reporting system, the Configuration Status Accounting System (CSAS) (e.g., Ships Configuration and Logistics Support Information System (SCLSIS), SPAWAR Headquarters (HQ) CSAS).

c. Technical Reviews.

(1) Application and tailoring of MIL-STD-1521.

(2) Technical reviews required during each phase of the CI/CSCI's life cycle, including the selection of conducting each technical review as a single event or on an incremental basis.

(3) Requirements for additional technical reviews during the Full Rate Production and Initial Deployment, Operations Support, and follow-on production phases.

(4) The process and schedule for conducting, coordinating, monitoring, documenting, submitting and approving technical reviews.

(5) Participants and their responsibilities, including engineering and QA coordination.

(6) CI/CSCI selection criteria for allocation purposes.

(7) The level and degree to which the technical reviews will be conducted.

(8) Process for establishing the functional and allocated baselines and updating their current configuration identification as a product of the technical review process.

(9) Process and procedures for coordinating with the configuration audit process to establish the preliminary product baseline (if applicable) and/or the product baseline, and updating the current configuration identification.

d. Configuration Audits.

(1) Application and tailoring of MIL-STD-1521.

(2) The process and schedule for conducting, coordinating, monitoring, documenting, submitting and approving each CA.

(3) The selection of conducting each CA as a single event or on an incremental basis.

(4) Participants and their responsibilities, including engineering and QA coordination.

(5) Requirements for additional CAs during the Full Rate Production and Initial Deployment, Operations Support, and follow-on production phases.

(6) The level and degree to which the CAs will be conducted.

(7) Process and procedures for coordinating with the technical review process to establish the preliminary product baseline (if applicable) and/or product baseline, and updating the current configuration identification.

e. Configuration Control.

(1) Application and tailoring of DoD-STD-480, DoD-STD-2167 and/or MIL-STD-481.

(2) Level and degree of configuration control to be applied.

(3) Configuration control process, including participants (by function and organization).

(4) Configuration Control Board (CCB) charter, including approval and disapproval authority, members (chairperson by name and code; all others only by function and organization) and their responsibilities, limits of authority, and requirements for coordinating/interfacing with other CCBs and higher authority.

(5) Approval/disapproval process for Engineering Change Proposals (ECPs) and Requests For Deviations (RFDs) and Requests For Waivers (RFWs).

(6) Process for changing the CI/CSCI and its configuration identification documents after the ECP/RFD/RFW is approved, including provisioning, spares, rotatable pools, tests, training and operational items.

(7) Process ensuring that the approved ECP/RFD/RFW is incorporated on schedule and the incorporated change satisfies its intended purpose(s).

(8) Special criteria for use of preliminary ECPs.

(9) Selection of either government or contractor approval of Class II ECPs and minor RFDs/RFWs.

(10) Provisions for maintaining a library of ECPs/RFDs/RFWs, including location, custodian, length of time to retain in an active file status, and turnover or archive requirements. Also, includes requirements for manual and/or automated data processing.

(11) Process and activities responsible for incorporating approved ECPs or correcting deviations and waivers.

(12) Provisions for preplanned product improvement program(s).

f. Configuration Status Accounting.

(1) Application and tailoring of MIL-STD-482.

(2) Level and degree of CSA.

(3) Procedures (including requirements for manual and/or automated data processing of the CSAS) and participants for CSA data collection, processing and distribution of configuration information.

(4) Form, format and data elements of the CSA data collection, file and distribution system.

(5) Compatibility and integration of the program's CSA system with the total program needs, the configuration identification document repository (Technical Data Center (TDC) Naval Electronic Engineering Center (NAVELEXENGCEN) Portsmouth), the central configuration data files (WSF at SPCC, the 3-M change reporting system, and the standard CSA system (e.g., SCLSIS, SPAWAR HQ CSA).

(6) Additional requirements for data distribution from the CSA system, including purpose for the data, frequency of publication, timeliness of each part of the CSA system, and distribution requirements.

1.5.5.4 Contractor's Configuration Management Plan Content. When the PD/PMW elects to acquire a CM plan from the contractor during the solicitation process the contractor's CM plan shall include information similar to that required of the PD/PMW's CM plan, but from the contractor's perspective. The contractor's CM plan shall also include a description of the contractor's engineering release system, how CM is conducted with regard to the acquisition of material items from vendors and subcontractors, and how CM is applied to the receipt of government furnished material, equipment and information.

1.5.5.5 Configuration Management Planning By Life-Cycle Phases. Figure 2-2 lists general CM requirements that are applicable during each phase of the CI/CSCI's life cycle. The figure is intended to be used only as a CM overview, depicting the normal evolution of a CI/CSCI and its configuration identification, leading to the establishment of each configuration baseline at corresponding major milestone decision points. The figure is not intended to dictate the acquisition strategy for the CI/CSCI but rather to show normal phasing as described by DoDD 5000.1 and DoDI 5000.2. Specific references to the text in Chapter 2 of this manual are required to appropriately plan for applying and interrelating each element of CM during the actual phases of the CI/CSCI's life cycle.

1.5.5.6 Compliance. All CM plans shall be reviewed by SPAWAR 003 to determine compliance with SECNAVINST 4130.2 and SPAWAR HQ CM policy and procedures.

1.6 Software Configuration Management. The procurement of hardware and software should be an integrated approach. However, a separate contractor CM Plan for software (in accordance with DoD-STD-2167) should be prepared in addition to the CRLCMP which provides the software unique requirements. The software CM program shall ensure that integrated procedures address the total system requirements, including such items as hardware, firmware related CI/CSCIs, support and training elements, facilities, and Government furnished hardware or software, as applicable. Computer software and firmware shall be identified, specified and managed as CSCIs. The mechanism for controlling computer software changes shall be the documentation for each CI/CSCI. It shall be the responsibility of the system configuration manager within SPAWAR HQ or the Software Support Activity (SSA) to ensure that this documentation is accurate and current in accordance with DOD-STD-2167, and that control procedures are implemented to ensure hardware/software compatibility and to prevent unauthorized changes.

1.7 Joint Configuration Management. Contracts, Military Interdepartmental Procurement Requests (MIPRs), Work Requests (WRs), etc., shall include requirements for CM. When SPAWAR is involved with another Government activity in the development, acquisition, modification, or support of a CI/CSCI, a Memorandum of Agreement (MOA) or Memorandum of Understanding (MOU), as appropriate, regarding CM shall be included as part of the interactivity agreement. This Manual shall be used as a guide in negotiating the agreement. When SPAWAR is the executive agency, the cognizant SPAWAR PMW shall be responsible for initiating this agreement. When joint programs involve North Atlantic Treaty Organization (NATO) countries, NATO Standardization Agreement STANAG 4159 will be invoked.

1.8 Major and Less Than Major Systems. Designation of the program phasing for major and less than major systems shall be consistent with DoDD 5000.1 and DoDI 5000.2. General CM requirements for each acquisition phase are defined below and shall be implemented accordingly, for both hardware/software as appropriate.

a. During Concept Exploration/Definition, CM is tailored and applied to the identified CI/CSCIs. In the event these items have not been identified, CM shall be exercised on the top level functional and physical characteristics as delineated in the system/development specifications or the Operational Requirement (OR) and Tentative Operational Requirement (TOR). During the System Requirement Review (SRR) that occurs in this phase, the Government requests that the contractor discuss his CM approach to controlling the design, to ensure compliance with the contractor's CM plans.

b. During Concept Demonstration/Validation, CM shall be limited to documenting the changes in the Functional Configuration Identification (FCI) and top level physical and functional characteristics. Class I ECPs shall be required to change the FCI. During the System Design Review (SDR) and Software Specification Review (SRR) held during this phase, the CM presentation should provide insight into internal control procedures, status of the specifications and drawings, software and hardware development status, etc. During the Concept Demonstration/Validation phase, the allocated baseline and associated Allocated Configuration Identification (ACI) is developed.

c. During Full Scale Development (FSD) and when appropriate, Low Rate Initial Production, CM shall be limited to documenting the changes in the FCI and ACI. Class I ECPs shall be required to change the FCI and ACI. Monitoring the CCB activities, participating in design reviews and maintaining a current FCI and ACI will ensure a smooth transition into production. The FSD and Low Rate Initial Production phase will result in Product Configuration Identification (PCI) documentation, a Functional Configuration Audit (FCA) and Physical Configuration Audit (PCA) which verifies the hardware and software against its identification documentation, and establishment of the PBL, and the associated PCI.

d. For those systems in concurrent Concept Exploration/Definition, Concept Demonstration/Validation, and FSD and Low Rate Initial Production, CM requirements shall be satisfied by applying the guidelines outlined above, in a concurrent manner aimed at the evolution/establishment of the PCI.

e. During Full Rate Production and/or Initial Deployment and after establishment of the PBL, changes to the hardware/software and its associated documentation require submittal of a Class I

ECP. In addition, configuration status accounting records will continue to be maintained by the contractor and monitored by the Government.

f. Once into Operations Support, maintenance of the system/software/equipment transitions from the contractor to the Government. The procuring activity or a designated design agent is responsible for maintaining configuration control of the hardware/software and documentation (i.e., specifications, drawings, technical manuals, etc.) through the ECP process and ensuring that the configuration status accounting records are kept current. Field Changes (FCs) are required to implement approved ECPs for operational equipment.

1.9 Other Equipment (Low Dollar Value or Lesser Mission/Design Precedence). CM requirements as described herein shall be carefully tailored to require, in the most cost-effective manner, only necessary services and data. Cases where tailoring is necessary are listed below:

a. The item is for a single or special military installation with no reprocurement envisioned.

b. The item is a "one-of-a-kind" type item such as a breadboard, experimental model, or test program with no planned development or production.

c. The item is of commercial design, modified to suit specific military operational requirements.

d. The item is commercially available from several sources and/or Non-Development Items (NDIs) and identical items are required. Sources could include the commercial marketplace or the procurement of NDIs.

1.10 Applicable References, Definitions, and Acronyms. Applicable reference documents, definitions and acronyms are contained in Appendices A, B, and C, respectively.

1.11 Responsibilities. Under the current SPAWAR organizational structure the Program Director (PD) shall be the authority responsible for the application and implementation of CM. The CM Office, SPAWAR 003, shall be responsible for maintaining current CM requirements in this manual and providing guidance for the proper implementation and application of CM. Specific responsibilities are outlined below and further reiterated at the beginning of each chapter throughout the Manual.

a. The PD/PMW shall have the responsibility and authority for:

(1) Implementing tailored, life-cycle CM to all equipments, subsystems, systems, and software under his cognizance including those currently deployed, in production, or in development.

(2) Ensuring that the appropriate contractual requirements and provisions for configuration identification, control, audits, and CSA are defined in all contracts, acquisition packages, Request for Proposals (RFPs), etc.

(3) Designating appropriate authorities such as the Design Agent and/or SSA early in the program to assist in CM activities for program development and strategy.

(4) Coordinating with the Warfare Systems Architecture and Engineering Office (WSA&E, SPAWAR 30) to identify and define any physical and functional design interfaces between their program and other Warfare Systems Elements (WSEs).

(5) Ensuring appropriate CM activities for research and application of NDI alternatives.

(6) Ensuring that configuration identification documentation of a CI/CSCI is appropriately baselined to ensure orderly transition from one major decision point to another.

(7) Exercising configuration control at all echelons. The control shall be based on the appropriate configuration identification, end user logistic considerations, and life-cycle stage.

(8) Organizing and conducting CCBs to review, and approve, or disapprove all ECPs, and RFDs/RFWs.

(9) Ensuring that the appropriate technical and management personnel and System Command (SYSCOM) representatives as defined in Chapter 3 are included in the CCB process.

(10) Budgeting, developing, procuring, and delivering all FC Kits, documentation and ILS support. The PD/PMW is also responsible for identifying who will install the FC and for providing details including priorities to SPAWAR 003 to effect installation through the Field Change Installation Program (FCIP).

(11) Conducting CAs to verify that the as-built version of a CI/CSCI complies with its technical documentation.

(12) Recording and reporting of all necessary CSA data. This shall include a listing of the approved configuration identification, the status of proposed changes and the implementation status of approved changes. Selected CSA data shall be provided to SPAWAR 003 in a timely and efficient manner, for entry into the SPAWAR CSA system.

(13) Conducting technical reviews to ensure that the development of CI/CSCIs reaches specified milestone requirements.

(14) Designing alterations, including the preparation and adequacy of all ECP and FC documents and materials and ensuring that all ILS requirements are available prior to installation. This responsibility includes:

(a) Incorporating the design changes into the baseline design documentation.

(b) Proofing of ECP and FC by test as part of the design of the ECP or FC and before release of the alteration kits.

(c) Procuring all required alteration kits.

(d) Inventory manager of alteration kits or material in his area of cognizance.

(e) Specifying by whom the alteration will be accomplished and tested (i.e., fleet, SPAWAR FCIP team, Navy field activity, PMW's designated contractor, or some combination of the above), specifying the role of each such group.

(f) Providing materials, kits and instructions on how to install and test the alteration.

(g) Updating or providing new repair parts to support the alteration in fleet use.

(h) Making changes to technical manuals and documentation to support the alteration once it is installed.

(i) Determining effectivity and retrofit production items.

(15) Installing and reporting the accomplishment of an alteration in hardware and software and components in Navy supply system or other stocks and providing SPAWAR 003 with accomplishment data.

(16) Preparing correspondence requesting other activities (Naval Sea Systems Command (NAVSEA), Naval Air Systems Command (NAVAIR) and Commandant of the Marine Corps (CMC)) to prepare conjunctive alterations, and monitoring the preparation and review of the conjunctive alteration.

(17) Coordinating the installation of all FCs through SPAWAR 003.

b. SPAWAR 003 is responsible for:

(1) Developing overall SPAWAR policies and procedures for CM in consonance with the Office of the Secretary of Defense (OSD) requirements and Navy criteria.

(2) Providing oversight for compliance with SPAWAR policies, procedures, and requirements, administrative direction and surveillance to the PD, PMW, contractors, and all others involved in the SPAWAR CM process.

(3) Providing technical support, along with other SYSCOMs, to the Chief of Naval Operations (CNO) in the development and maintenance of OSD and Navy policies, principles, and general procedures for the CM program.

(4) Interfacing CM procedures with other DoD and Navy management disciplines.

(5) Acting as primary SPAWAR point-of-contact, for both HQ and field activities, for coordinating CM matters and resolving associated problem areas including the coordination and establishment of SPAWAR position on policies and procedures proposed by higher authorities, the coordination, integration and standardization of procedures, relating to configuration identification, audits, technical reviews, control, and status accounting.

(6) Assisting the PD in ensuring proper configuration identification, by assigning Joint Electronic Type Designation System (JETDS) nomenclatures, equipment serial numbers, and review the format of identification plates.

(7) Assigning drawing, specification, technical manual, and other document numbers through the TDC NAVELEX Portsmouth, Virginia.

(8) Developing, managing, and maintaining a Command-wide ECP Tracking System to include the assignment of all CCB numbers. The ECP Tracking System is a management tool enabling the PD/PMWs to receive, track and process ECPs submitted by contractors and SPAWAR activities. In addition, the system will

enable SPAWAR 003 to perform its oversight function by tracking upcoming or overdue events at various stages of the ECP process and automatically generate reports relative to those events.

(9) Providing assistance and guidance in the organization of PD CCBs. As a member of the PD CCBs, SPAWAR 003 will review all final ECPs for conformance to SPAWAR policies and procedures, as delineated in Chapter 5 of this manual.

(10) Managing the SPAWAR FCIP and maintaining a Command-wide FC tracking system. This responsibility will involve reviewing all Field Change Bulletins (FCBs), assigning field change numbers, directing the FCIP team, authorizing installation of a FC, maintaining FC records and coordinating with and informing the PD on all FC related matters. Act as fleet liaison and coordinate the scheduling of the installation of all FCs including, but not limited to, those installed by the FCIP, Alteration Installation Team (AIT), contractor, or other team/activity.

(11) Providing guidance on conducting CAs and CM's role in the conduct of technical reviews.

(12) Establishing and maintaining a Command-wide CSA system. This system will include CI/CSCI top-down breakdown information, establishment of baselines, changes to baselines, and status of changes.

2.0 CONFIGURATION IDENTIFICATION

2.1 General. The purpose of configuration identification is to define the functional and physical characteristics of each CI in a system or equipment in sufficient detail so that it may be selected, developed, tested, evaluated, produced (including fabricated, manufactured and constructed), accepted, operated, maintained, supported and competitively reprocured. In addition, configuration identification, properly applied, protects the integrity of the design when changes are required or when maintenance is performed during the operational and logistics support phases. Configuration identification is a key element of CM and provides the basis for development of effective configuration control and status accounting, and for the conduct of technical reviews and audits.

This chapter provides guidance for the PD/PMW in selecting the types of documentation required to ensure an adequate technical description of the CI/CSCIs and forms the basis to maintain adequate CM. CI/CSCIs for hardware, software, and NDIs are those major systems/subsystems, critical lower assembly items, or the smallest software element whose functions and performance parameters must be specifically defined and controlled. CI selection is a program management decision and will be identified during Concept Demonstration/Validation. Figures 2-1, 2-2, and 2-3 graphically display documentation requirements and concurrent hardware and software life-cycle phases, respectively.

2.2 Responsibilities

2.2.1 Program Director/Program Manager Warfare. The responsibilities for the PD/PMW are as follows:

a. Ensure acquisition of all design disclosure documentation required for configuration management.

b. Monitor preparation of design disclosure documentation to ensure its adequacy, completeness and accuracy.

c. Provide for storage and maintenance of design disclosure documentation through the life cycle of the equipment/system.

d. Ensure proper documentation identification through a numbering system, either government or contractor.

e. Provide for approval of SPAWAR design disclosure documentation.

THIS PAGE INTENTIONALLY LEFT BLANK

Documentation Requirements for Hardware/Software Development

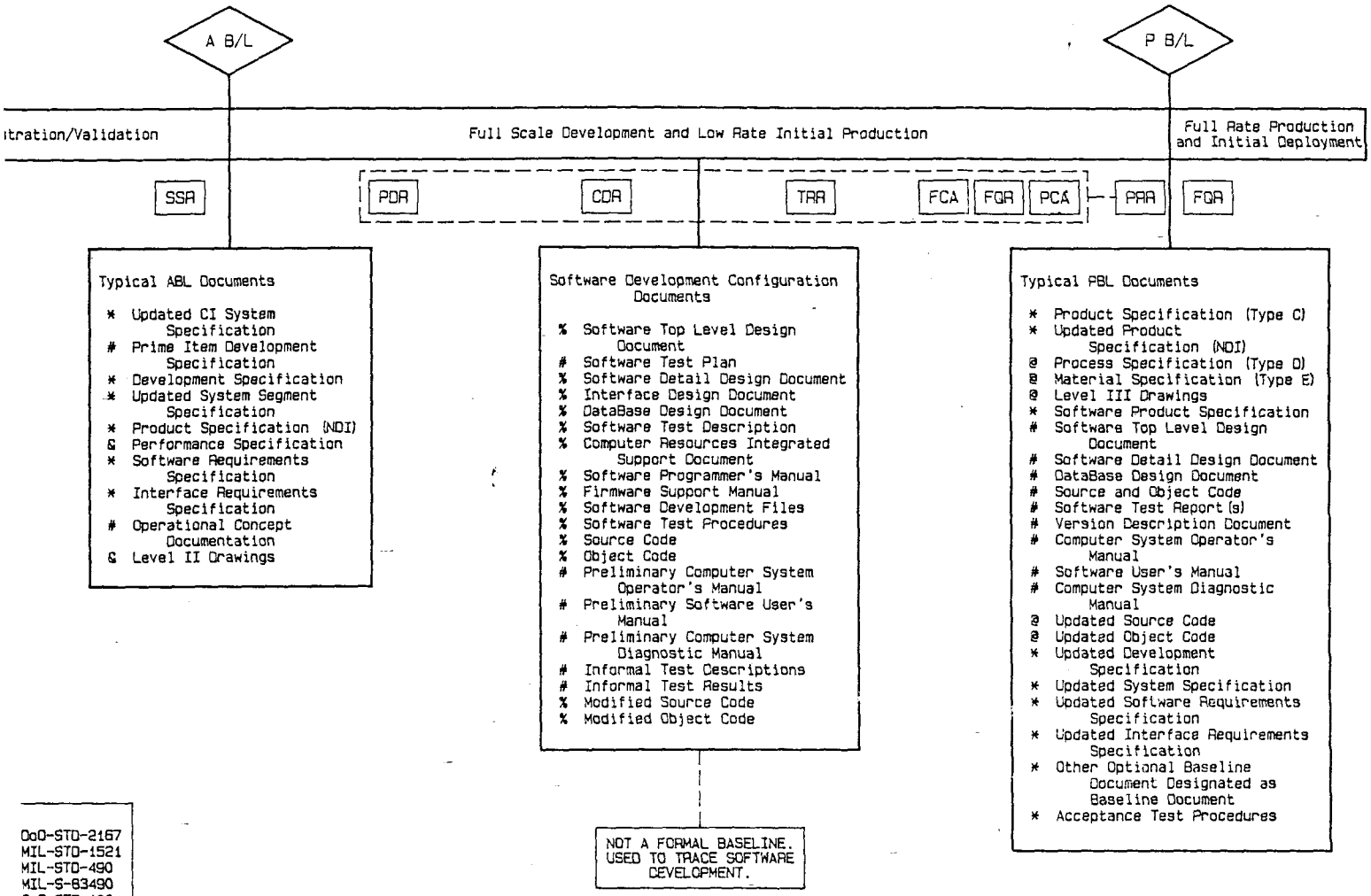

Figure 2-1

Documentation Requirements for Hardware/Software Development

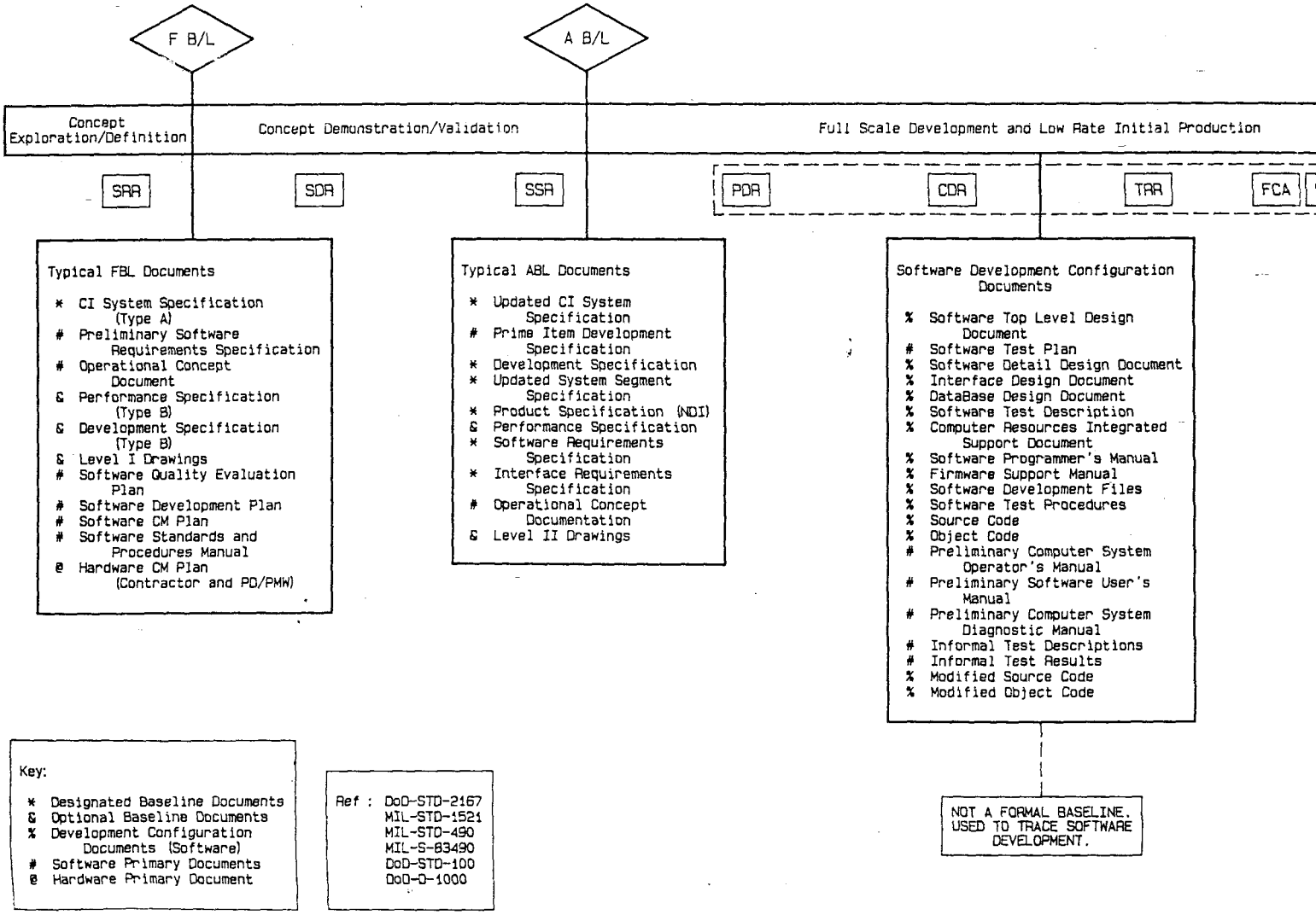

SYSTEM DEVELOPMENT CYCLE

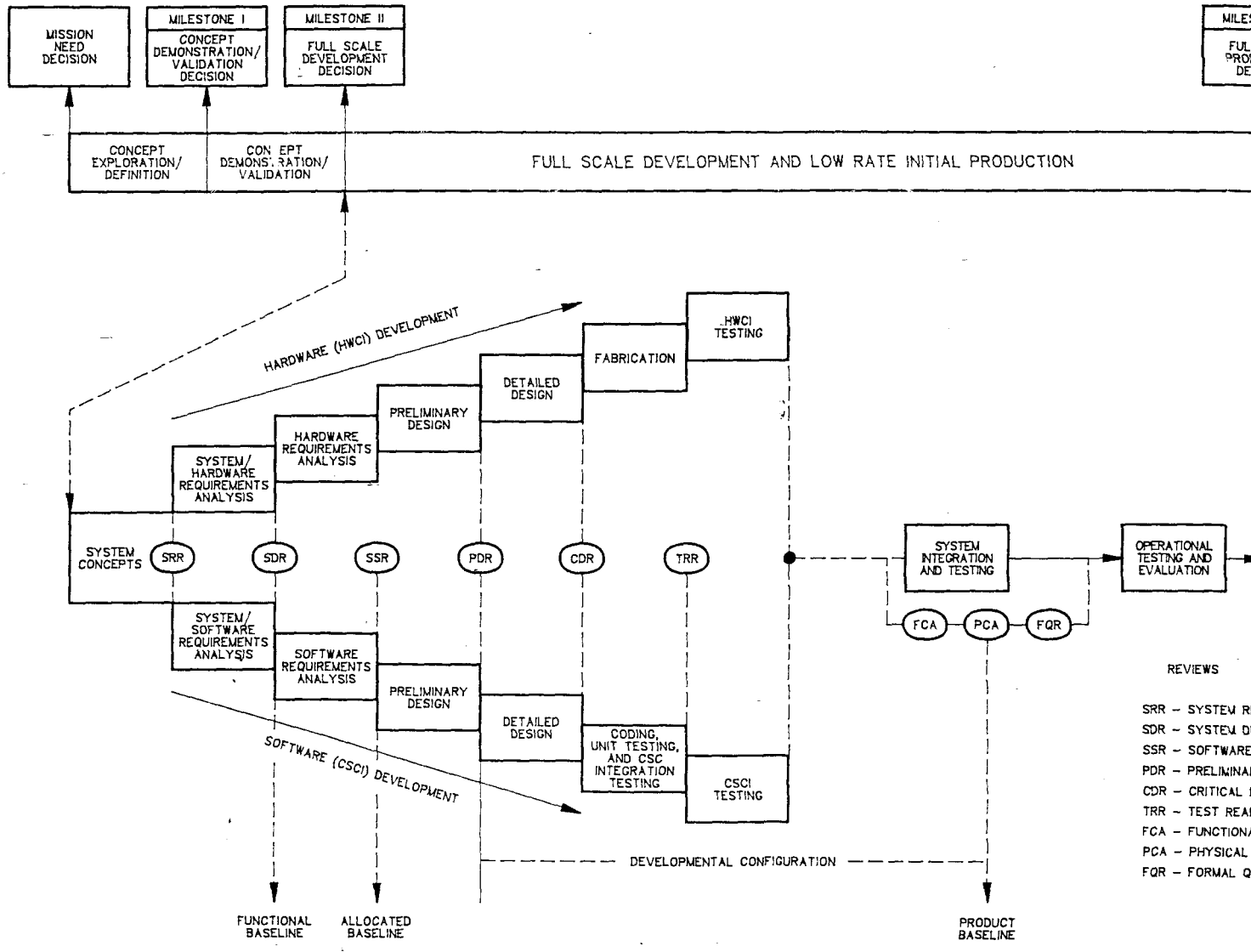

SYSTEM DEVELOPMENT CYCLE

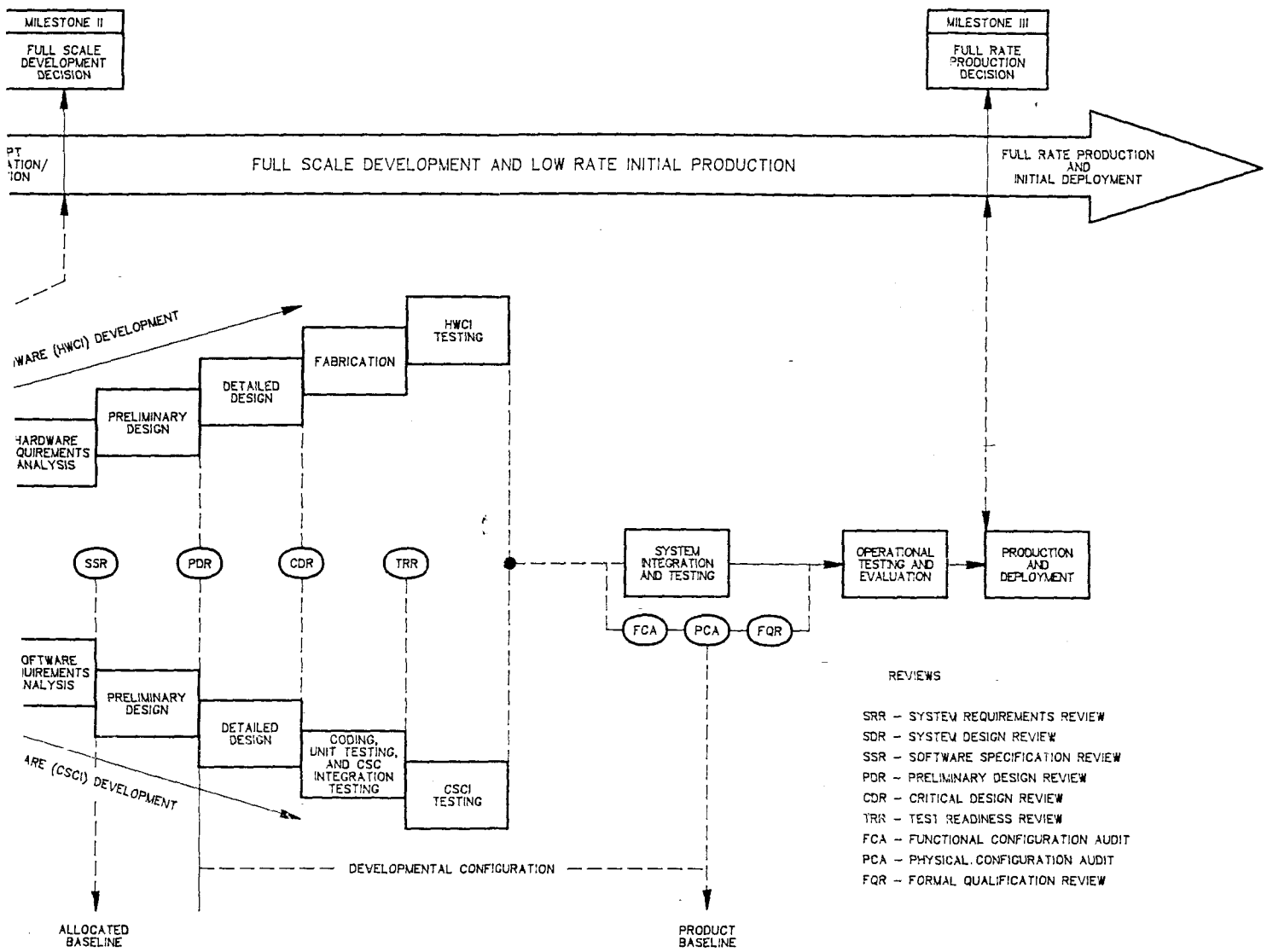

Figure 2-2

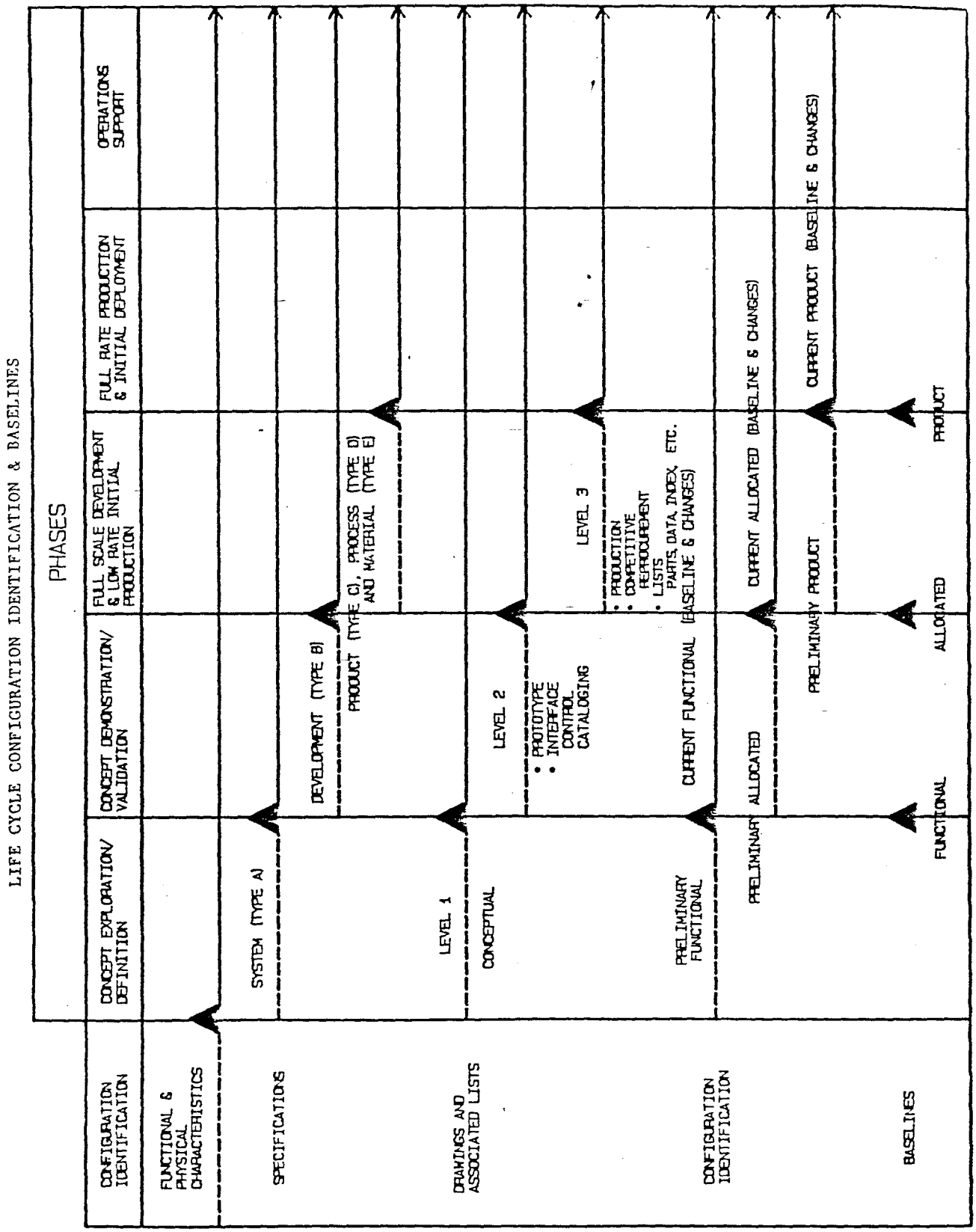
LIFE CYCLE CONFIGURATION IDENTIFICATION & BASELINES
PHASES
CONCEPT EXPLORATION/ DEFINITION
CONCEPT DEMONSTRATION/ VALIDATION
FULL SCALE DEVELOPMENT & LOW RATE INITIAL PRODUCTION
FULL RATE PRODUCTION & INITIAL DEPLOYMENT
OPERATIONS SUPPORT
CONFIGURATION IDENTIFICATION
FUNCTIONAL & PHYSICAL CHARACTERISTICS
SPECIFICATIONS
DRAWINGS AND ASSOCIATED LISTS
CONFIGURATION IDENTIFICATION
BASELINES
SYSTEM (TYPE A)
DEVELOPMENT (TYPE B)
PRODUCT (TYPE C), PROCESS (TYPE D) AND MATERIAL (TYPE E)
LEVEL 1
CONCEPTUAL
LEVEL 2
• PROTOTYPE
• INTERFACE
CONTROL
CATALOGING
LEVEL 3
• PRODUCTION
• COMPETITIVE REPROCUREMENT
• LISTS
PARTS, DATA, INDEX, ETC.
(BASELINE & CHANGES)
PRELIMINARY FUNCTIONAL
CURRENT FUNCTIONAL
PRELIMINARY ALLOCATED
CURRENT ALLOCATED (BASELINE & CHANGES)
PRELIMINARY PRODUCT
CURRENT PRODUCT (BASELINE & CHANGES)
FUNCTIONAL
ALLOCATED
PRODUCT

Figure 2-3

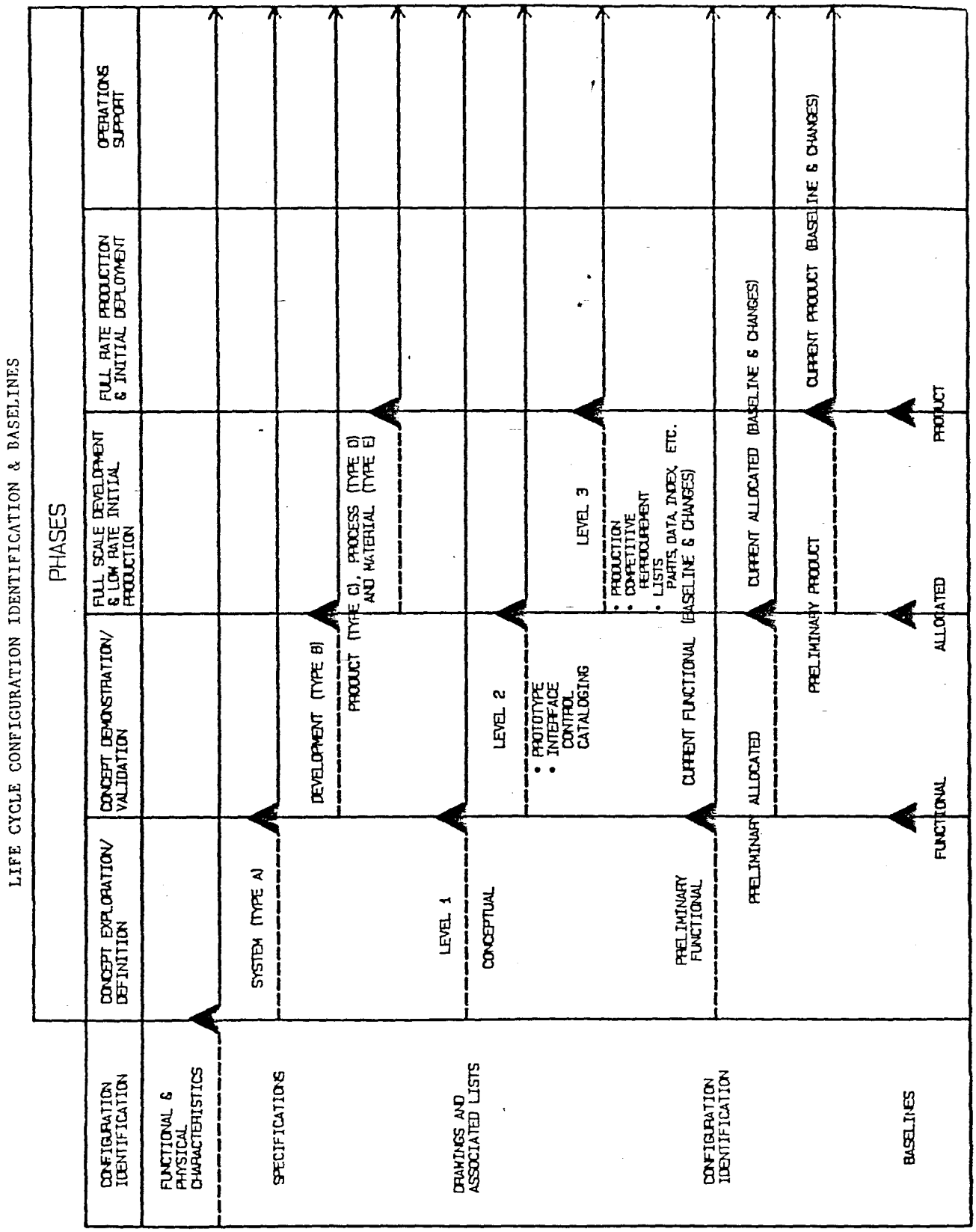
LIFE CYCLE CONFIGURATION IDENTIFICATION & BASELINES
PHASES
CONCEPT EXPLORATION/ DEFINITION
CONCEPT DEMONSTRATION/ VALIDATION
FULL SCALE DEVELOPMENT & LOW RATE INITIAL PRODUCTION
FULL RATE PRODUCTION & INITIAL DEPLOYMENT
OPERATIONS SUPPORT
CONFIGURATION IDENTIFICATION
FUNCTIONAL & PHYSICAL CHARACTERISTICS
SPECIFICATIONS
DRAWINGS AND ASSOCIATED LISTS
CONFIGURATION IDENTIFICATION
BASELINES
SYSTEM (TYPE A)
DEVELOPMENT (TYPE B)
PRODUCT (TYPE C), PROCESS (TYPE D) AND MATERIAL (TYPE E)
LEVEL 1
CONCEPTUAL
LEVEL 2
• PROTOTYPE
• INTERFACE
CONTROL
CATALOGING
LEVEL 3
• PRODUCTION
• COMPETITIVE REPROCUREMENT
• LISTS
PARTS, DATA, INDEX, ETC.
(BASELINE & CHANGES)
PRELIMINARY FUNCTIONAL
CURRENT FUNCTIONAL
PRELIMINARY ALLOCATED
CURRENT ALLOCATED (BASELINE & CHANGES)
PRELIMINARY PRODUCT
CURRENT PRODUCT (BASELINE & CHANGES)
FUNCTIONAL
ALLOCATED
PRODUCT

Figure 2-3

THIS PAGE INTENTIONALLY LEFT BLANK

f. Ensure proper item identification, i.e., marking, serialization, lot numbering, and nomenclature.

g. Ensure that design disclosure documentation requirements are tailored to a particular acquisition, and then approved and maintained current throughout the life cycle of SPAWAR equipment and software.

h. Select and manage a design agent and/or SSA early in the program, to provide support throughout the life of the system/equipment and/or software. This support includes, but is not limited to, identifying program needs and requirements, developing program strategy, configuration control, evaluation of design changes/problems and maintenance of baseline design disclosure documentation.

i. Implement NDI initiatives in satisfying acquisition requirements. If NDI is selected, the PD/PMW will ensure the NDI is adequately defined in baseline configuration identification documentation. All NDI decisions must be made prior to Milestone III.

j. Ensure that requirements of all Warfare Systems Performance Specifications (WSPSs) and Warfare System Controlled Interface Drawings (WSCIDs) are reflected in appropriate design disclosure documentation for SPAWAR hardware and software.

k. Implement current SPAWAR Acquisition Streamlining Initiative (ASI) policy and procedures by ensuring that solicitations and contracts are void of counterproductive and overspecified requirements.

2.2.2 Acquisition and Logistics Planning Directorate (003). The responsibilities of the Acquisition and Logistics Planning Directorate are as follows:

a. Assist the PD/PMW in determining contractual requirements for procuring appropriate design disclosure documentation by reviewing acquisition packages presented to the PD/PMW Data Requirements Review Board (DRRB).

b. Assign, confirm, revise, and/or cancel JETDS nomenclature for all SPAWAR electronic equipment.

c. Assign equipment serial numbers and review the format of equipment nameplate drawings.

d. Establish and provide technical and management direction to the central backup documentation repository for storage of reproducible copies of technical design disclosure and other

documentation required for acquisition, maintenance, repair and operational use of SPAWAR hardware and software.

2.3 Application

2.3.1 General. A basic requirement for the effective application of CM is the preparation of timely, complete and accurate configuration identification of the CI/CSCI during each life-cycle phase. The documented configuration identification is an element of CM and a prerequisite to the performance of the other CM elements.

As appropriate to the life-cycle phase, each alternative design CI shall be identified and documented in a Design Disclosure Package (DDP), consisting of product definition and engineering support data. Product definition data consists of specifications, engineering drawings and associated lists, logic diagrams, flow charts and interface control documents. Engineering support data comprises various studies, reports, minutes of meetings and technical reviews (see paragraph 2.3.4). This DDP not only identifies and describes the functional and physical characteristics of the CI, but it also provides an audit trail throughout the item's life cycle.

2.3.2 Computer Software. Although computer software development follows the same process as prescribed for hardware, there are certain unique software identification differences which require recognition.

2.3.2.1 The PD/PMW shall require the contractor to implement the procedures specified in either the Software Configuration Management Plan (SCMP), or Software Development Plan (SDP). These procedures shall identify the various Top Level Computer Software Components (TLCSCs), Lower Level Computer Software Components (LLCSCs), and Units that make up the CSCI, and shall indicate the relationship between the CSCI and its documentation. Configuration identification shall include the following:

a. Identification of the following documentation which establishes and defines:

(1) The Functional Baselines (FBLs) and Allocated Baselines (ABLs), which shall consist of the System Segment Specification (SSS) and the Software Requirements Specification (SRS) and Interface Requirements Specification (IRS) for each CSCI in the system or segment and CSCI requirements documents provided or approved by the contracting agency.

(2) The Developmental Configuration, which consists of documentation defining the design and code (including revisions)

for each CSCI and its constituent TLCSCs, LLCSCs, and Units. The Developmental Configuration also contains the complete and current software code (source and object) of all Units that have been successfully tested and reviewed. Documentation and code comprising the Developmental Configuration shall be designated for configuration control by the contractor until the documentation is entered into the PBL and the source and object code are delivered (Figure 2-1). Documentation and code shall be provided to the contracting agency for information or provisional review in accordance with the contract data requirements.

(3) The PBL will be established upon successful completion of the FCA and PCA. The PBL will include the approved Software Product Specification (SPS) for each CSCI and shall be under contracting agency configuration control, unless otherwise stipulated in the contract.

b. Identification of computer software media containing code and/or documentation by titling, labeling, numbering, and cataloging procedures. The procedures shall accomplish the following:

(1) Uniquely identify all the TLCSCs, LLCSCs, and Units of each CSCI, and the specific versions of each element to which a document applies.

(2) Uniquely identify the serial, edition, change status, and other identification details of each document.

(3) Identify the specific contents of each medium, including change status.

2.3.3 Non-Development Items. Selection of a NDI to wholly or partially satisfy an Operational Requirement (OR) does not relieve the PD/PMW from the responsibility to ensure the system/equipment functions properly, and is reprocurable, supportable and susceptible to appropriate failure analysis. In order to ensure these responsibilities can be successfully carried out, the PD/PMW must ensure:

a. A NDI is defined by proven configuration identification documentation for interoperability with a higher level system or equipment or its in-service use;

b. Availability of configuration identification documentation for procurement of all repair parts to be integrated into the Navy Supply System;

c. The required degree of configuration control is exercised for compatibility of all items delivered with personnel training,

logistics support, maintenance practices, interfacing systems and equipment; and

d. Availability of status accounting data required for item traceability, trouble reporting, failure analysis, etc.

2.3.4 Design Disclosure Package. The DDP encompasses those documents and data required to:

a. Document engineering decisions made during the development process;

b. Identify all attributes of the design required to assure production, procurement, and acceptance of items incorporating all characteristics, attributes and elements of the design proven successful during the development; and

c. Protect the integrity of the design when changes are required or maintenance/repair is performed during operational and logistics support.

2.3.4.1 The DDP includes both product definition data and engineering support data.

a. Product definition data includes those documents that define the item, required manufacturing and testing equipment, test requirements and procedures, special manufacturing processes, packaging requirements and other data to assure acquisition of necessary items. Specifically, design disclosure documentation for product definition purposes includes data such as:

- Product specifications
- Material specifications
- Engineering drawings and associated lists
- Test criteria
- Test and inspection procedures
- Special processes, including tapes/programs
- Shop accessories design disclosure
- Test equipment design disclosure
- Inspection gauges design disclosure
- Preservation and packaging requirements

b. Engineering support data includes all data and documents recording design objectives and decisions made during the development period leading to the design meeting the stated requirements/objectives. Engineering support data is necessary in the operation and support of an equipment to evaluate the total impact of proposed changes and investigate failures or inadequate performance. Design disclosure documentation for engineering support purposes includes such data as:

- System specification
- Development specification
- Trade-off studies
- Parameters documents
- Sneak circuit analysis reports
- Failure Modes, Effects and Criticality Analysis (FMECA) reports
- Electronic circuit/circuit tolerance reports
- Stress analysis reports
- Producibility analysis reports
- Testability analysis reports
- Preferred parts, devices and materials lists
- Design review reports
- Reliability reports
- Maintainability reports

2.3.4.2 A DDP must be prepared for the entire system or equipment and for each CI, and supported by a complete item indentured parts list (listing all parts to the assembly level or lower), and an index list. Each assembly or equipment is to be covered by an indentured parts list. Each assembly or part to be procured separately, either as a breakout item during production or as a repair part, should be covered by both a parts list and a data list to assure a complete procurement package separable from the top level item DDP.

2.3.4.3 A DDP must be prepared for all items used in the system/equipment under development. Where an item requires design of piece parts, the DDP must include drawings depicting the piece parts. Where the design incorporates available items at any level of assembly or part, the design disclosure shall include an appropriate specification, control drawing or other product definition documents suitable for satisfactory procurement of an item, unless the item is adequately defined by an existing government or industry association document. Where the specification or control drawing invokes supplier design disclosure, the supplier's documents must be included as deliverables with the design disclosure documents.

2.3.5 Warfare System Definition. When first conceived, the complete technical description of a proposed new Warfare System (WS) is the OR which initiated the development. The WSA&E (SPAWAR 30) then performs the tradeoffs and analyses necessary to allocate the OR to the appropriate WSE. Based on these studies and coordination with the Warfare System Element Managers (WSEMs), WS performance requirements and interface constraints are allocated to the appropriate WSE.

2.3.5.1 Warfare System Documentation. In addition to the OR for the performance of a system which must be specified and documented, the system must also operate in the real world of friendly and hostile forces. Interface control documentation specifies requirements that must be met by each of the interfacing items. Thus, interface control documentation must establish and define constraints upon the design of such items. The documentation developed during this process constitutes part of the FBL for each system which is identified for further development. Figure 2-4 displays the entire forefront WS process in a chronological, functional flow format.

2.3.5.2 Warfare System Performance Specification. The WSPS delineates the number of systems required. The assignment of the various systems may be to more than one PD. SPAWAR 32 is the organization assigned the responsibility to develop WSPSs. These specifications are used to document the conversion of Battle Force level requirements contained in ORs for the WS into top-level specifications for WSE. The WSPS is the bridge between the Warfare Systems Operational Requirement (WSOR) and the more detailed Type A specifications for hardware and/or software systems. Until such time SPAWAR 32 publishes the WSPS instruction, the PD/PMW is required to coordinate with SPAWAR 32 on the development of these specifications.

2.3.5.3 Warfare System Controlled Interface Drawing. SPAWAR 32 has been assigned the responsibility to define and control the interfaces between all WSEs to ensure total WS integration. Adherence to the policies and procedures governing the control of characteristics covered by the WSCID is mandatory. The cognizant PD/PMW in conjunction with SPAWAR 32 and the coordinating activity must assure that these characteristics are defined in sufficient detail in the WSCID to enable evaluation and control of the physical and functional design interrelationships. Adequate contractual provisions shall be made by the PD/PMW for adherence to these requirements throughout the life cycle of the program. Specific WSCID procedures to be followed are contained in SPAWARINST 9000.1.

2.4 Baseline Management

2.4.1 General. Each level of configuration identification shall be a product of a particular phase of the acquisition cycle, i.e., FBL from the Concept Exploration/Definition phase; ABL from the Concept Demonstration/Validation phase; and PBL from the FSD and, if appropriate, Low Rate Initial Production phase. The PD/PMW shall require the contractor to apply SPAWAR CM procedures in the development, production and modification of the CI/CSCI

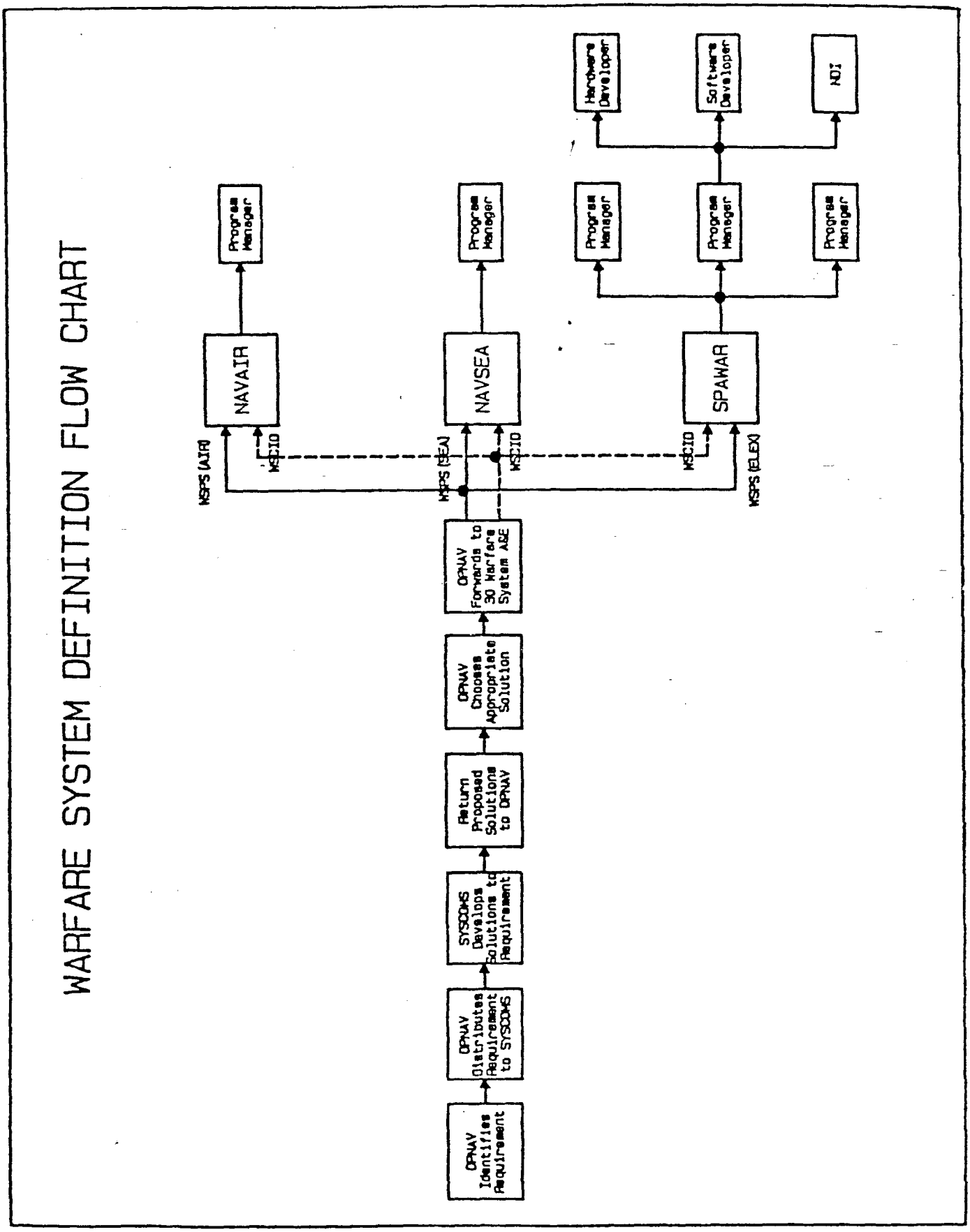
WARFARE SYSTEM DEFINITION FLOW CHART
OPNAV Identifies Requirement
OPNAV Distributes Requirement to SYSCOMS
SYSCOMS Develops Solutions to Requirement
Return Proposed Solutions to OPNAV
OPNAV Chooses Appropriate Solution
OPNAV Forwards to 30 Warfare System ASE
NSPS (AIR)
NSCID
NSPS (SEA)
NSCID
NSCID
NSPS (ELEX)
NAVAIR
NAVSEA
SPAWAR
Program Manager
Program Manager
Program Manager
Program Manager
Program Manager
Hardware Developer
Software Developer
NDI

Figure 2-4

and its configuration identification in such a manner that the documentation progresses from a preliminary level to an approved or baselined level, and finally to an updated or current status. The latest configuration identification, which includes all the changes and updates made during the phase, will be used in support of the milestone decision making process defined by DoDD 5000.1 and DoDI 5000.2. Formal SPAWAR acceptance is required for each level of configuration identification before the configuration baselines can be effected. Each baseline shall be established by incorporating the changes directed or approved by the decision authority. Configuration baselines are established at those points in time when it becomes necessary to ensure orderly transition from one major milestone point to the next. The baselines shall be used as the formal departure point for the next acquisition phase.

The foregoing and the following address baselines at the system or prime item level. It is noted, however, that the principles of documenting and controlling attributes at lower levels are functions of the developing activity and the PD/PMW and must be applied in a manner similar to those outlined herein. For example, in a large system it is probable that each element of the ABL will probably be a FBL for a significant development effort. The formality and rigor of documenting and controlling these lower-level-item baselines may be reduced from those required herein, but shall be adequately described and procedures documented in PD/PMW and contractor configuration management plans.

2.4.2 Configuration Identification Compatibility. The FCI, ACI, and PCI are mutually consistent and compatible. Each succeeding level of configuration identification, i.e., from FCI to ACI to PCI, shall be a logical and detailed extension of its predecessor(s). Redundant documentation should be avoided to eliminate conflicts between levels of identification. If a conflict arises between levels of identification, the order of precedence shall be (1) FCI, (2) ACI, and (3) PCI. Action shall be taken by the PD/PMW to resolve any conflicts. Configuration identification shall conform to the requirements of the appropriate DoD standardization documents, and tailored to be consistent with total program needs and the requirements of this manual.

During the life cycle of a CI/CSCI, CI/CSCIs may exist at stages of development different from that of its higher level item. For example, one allocated CI/CSCI may already be a standard inventory item with an approved PBL, while another might be in parallel or later development. Therefore, configuration identification of the CI/CSCI must be accomplished in coordination to accommodate the scheduled integration with the higher level CI/CSCI.

2.4.3 Baseline Establishment. The ability of the government to establish configuration baselines appropriate to the life-cycle phase of the CI/CSCI is dependent upon the availability of accurate and complete descriptive data. It is the PD/PMW's responsibility to apply CM during the initial acquisition of the CI/CSCI so as to acquire this data.

2.4.3.1 All three baselines shall be established when the CI/CSCI is developed wholly or partially with government funding. However, the ABL is not required when the CI/CSCI is neither allocated from a higher level item nor has lower level CI/CSCIs selected from it. All of the data required for the total program needs are a part of the engineering development of the CI/CSCI, or are required by the government for other disciplines, and shall be used to establish the appropriate configuration baselines. In those instances where data is properly established as "contractor proprietary", the government shall determine if it is more cost effective to buy rights to the data, do without it, develop new data and CI/CSCIs, or return to the original contractor whenever reprocurement or support of the CI/CSCI is required.

2.4.3.2 When the CI/CSCI is wholly developed with private funding and is acquired by the government, the data available for the item shall be evaluated by the PD/PMW and included in the appropriate baselines. The PD/PMW shall resolve any deficiencies in the data to satisfy total program needs and configuration baseline requirements. The above exception regarding the contractor's proprietary rights also applies to this type of CI/CSCI.

2.4.4 Interface Documentation. Interface documentation may be required to achieve an appropriate degree of integration and compatibility between CI/CSCIs. These interfaces shall be specifically described in the ACI. Complete interface identification shall be prepared to a level of detail consistent with the life-cycle phase of the CI/CSCI. Identification of interfaces is essential to the configuration identification process and shall describe the total system or program involvement. All internal and external influences that affect CI/CSCI design and performance shall be identified, documented, evaluated and controlled.

2.5 Implementation

2.5.1 Functional Configuration Identification/Functional Baseline General Requirements. The FCI is required on designated system level CI/CSCIs. This identification is developed during Concept Exploration/Definition and serves throughout the life cycle of the system CI/CSCI as a description of its required functional characteristics including interface parameters, test and evaluation criteria and logistic requirements. The FCI shall be documented by one or more performance oriented specifications in accordance

with MIL-STD-490 (i.e., Type A - System Specification, Type B-Development Specification - Prime Item, Critical Item, computer program, etc., as appropriate in tailoring to specific program and contract requirements). The specification may also delineate PCI documentation for selected items, such as a privately developed item or an item already in the inventory as a part of the CI/CSCI. Specifically:

a. The FBL shall be defined by the approved system specification which will prescribe:

(1) Necessary functional characteristics;

(2) Tests and test criteria required to demonstrate achievement of specified functional characteristics;

(3) Necessary interface characteristics with associated CI/CSCIs;

(4) Design constraints, such as envelope dimensions, component standardization, use of inventory items, and ILS requirements; and,

(5) Interfaces between computer equipment, communications, and personnel functions to enable the further definition and management of the computer software and computer equipment resources.

b. The cognizant PD/PMW is responsible for the preparation and control of all FCI documents and shall ensure all requirements imposed by higher authority are incorporated (Figure 2-5). Where higher level authority documents, such as WSPSs and WSCIDs, are a part of the FCI, preparation, approval and technical change control of such documents shall remain with the originating activity. FCI documents prepared by or for the PD/PMW shall be approved and placed under technical change control of the responsible PD/PMW. The PD/PMW shall ensure that each requirement derived from a higher authority is traceable to its source so that proposed changes are not inadvertently approved, without approval and concurrent change by the higher level of authority.

2.5.1.1 Establishment of Functional Baseline. The establishment of the FBL shall be based on and follow the SRR (hardware and software), and upon reaching a technical understanding of the validity and degree of completeness of the Type A and/or Type B specifications developed. The recommendations of this review and any changes shall be incorporated into the specifications and when approved, shall establish the FBL in accordance with SECNAVINST 4130.2.

NOTE: Figure 2-1 shows the specific reviews held and the documents comprising each phase of hardware and software development. Details on design reviews are provided in Chapter 3 and information on the content requirements of the various specifications are contained in MIL-STD-490.

2.5.1.2 Functional Configuration Identification Software Documentation Development. In addition to the Type A and Type B specifications previously developed, there is preliminary software development documentation required in accordance with DOD-STD-2167. This documentation further defines the computer software and computer equipment requirements comprising the FBL for software development, and includes:

- Operational Concept Document (OCD);
- SCMP;
- SDP; and,
- Software Quality Evaluation Plan (SQEP).

The software review to be held during this phase is the SRR and shall be conducted in accordance with MIL-STD-1521.

2.5.1.3 Non-Development Items. Where all operational requirements can be met by NDIs, the FCI should include a specification meeting the content requirements of MIL-STD-490 Type A or B1, as appropriate.

Where NDIs are proposed for partial solutions to the total operational requirement, the functional configuration identification may include a Type A or B1 specification for the entire system/equipment supplemented by a Type B specification for each proposed NDI. In any event, FCI must include all warfare system requirements.

To encourage the selection of NDI solutions in later development phases, the system or prime item specification must clearly delineate critical requirements, as differentiated from goals, desires and needs that may be met by trade-offs. Existing MIL-SPECs or MIL-STDs, if cited, should be for guidance only. Requirements for attributes such as reliability, maintainability and safety should be specified as goals, or left blank with a requirement that attainable values may be provided during the next development phase. The NDI development specification must include a discussion of planned deployment, maintenance and logistic support, and training and manpower levels for operation of the system or item.

NDI development specifications should clearly delineate test requirements for item qualification and other verification tests, as appropriate.

FUNCTIONAL CONFIGURATION IDENTIFICATION
SOURCE AND SUPPORT DATA

- JUSTIFICATION FOR MAJOR SYSTEM NEW START OR DOD COMPONENT OPERATIONAL REQUIREMENT EQUIVALENT:
  - Defense Guidance Element
  - Mission and Threat
  - Alternative Concepts
  - Technology & Risks
  - Funding Implications
  - Constraints
  - Acquisition Strategy
  - Functional and Physical Characteristics
- SECRETARY OF DEFENSE PROGRAM DECISION MEMORANDUM (OR EQUIVALENT)
- CONCEPT EXPLORATION PROGRAM MANAGEMENT PLAN:
  - Organization & Operations Concept
  - Maintenance Concept
  - Manpower & Training
  - Life-Cycle Cost Estimates
  - Acquisition Plan (Program & Phase)
  - Milestones/Schedules (Program & Phase)
- FUNCTIONAL REQUIREMENTS, CONSTRAINTS AND THRESHOLDS:
  - Mission & Threat Analyses
  - Rationalization, Standardization, and Interoperability
  - Reliability, Maintainability, and/or Availability
  - Survivability & Nuclear Hardening
  - System Safety
  - Security
  - Supportability
  - Test & Evaluation
  - Environment
- ACQUISITION SUPPORT DOCUMENTATION:
  - Configuration Management Plan(s)
    - Government CMP
    - Contractor CMP
  - Product Assurance Plan
  - System Engineering Management Plan
  - Government-Furnished Property Use Plan
  - Test & Evaluation Master Plan
  - Supportability Assessment Plan
  - Statement of Work
  - Contract Data Requirements List
  - Federal Acquisition Regulations
- ENGINEERING CHANGE PROPOSALS
- CONFIGURATION CONTROL BOARD MINUTES AND DIRECTIVES
- SYSTEM REQUIREMENTS REVIEW

FCI Documents

- CI/SYSTEM SPECIFICATION (TYPE A)
- SYSTEM SEGMENT SPECIFICATION (TYPE A)
- SOFTWARE REQUIREMENTS SPECIFICATION
- OPERATIONAL CONCEPT DOCUMENT
- PERFORMANCE SPECIFICATION (TYPE B)
- DEVELOPMENT SPECIFICATION (TYPE B)
- LEVEL I DRAWINGS
- SOFTWARE QUALITY EVALUATION PLAN
- SOFTWARE DEVELOPMENT PLAN
- SOFTWARE CM PLAN
- SOFTWARE STANDARDS AND PROCEDURES MANUAL
- HARDWARE CM PLAN (CONTRACTOR AND PD/PMW)

Figure 2-5

2.5.2 Allocated Configuration Identification/Allocated Baseline General Requirements. During the Concept Demonstration/Validation phase, design approaches and experimental models are developed and tested to provide designers with information and assurance in determining the optimum array of system and subsystem elements and the functional and physical characteristics required of each to achieve the goals and requirements of the item's FBL. This effort culminates in a set of documents that define the necessary characteristics of each functional element or equipment to be used or developed further in the FSD and Low Rate Initial Production phase (Figure 2-6). This set of documents comprises the ACI for the ABL.

These documents shall be prepared by the development activity and will generally conform to MIL-S-83490 Type B Specifications supplemented by Interface Control Documents, or other existing documents required to provide a basis for further design effort.

The ABL shall be defined by the initial approved identification which will prescribe:

a. Functional characteristics and requirements that are allocated from those of the higher level CI/CSCI;

b. Tests required to demonstrate achievement of its allocated functional characteristics;

c. Necessary interface requirements with other associated system/equipments which further define system and computer resource requirements (See section 2.5); and,

d. Design constraints, such as envelope dimensions, component standardization, use of inventory items, ILS requirements, and Government-required standards.

2.5.2.1 Establishment of the Allocated Baseline. A formal ABL shall be established consisting of documents approved by the PD/PMW and identified by SPAWAR numbers, and shall be subject to PD/PMW change control. All characteristics and attributes specified which are directly derived from FBL requirements shall be identified in a manner that will directly relate each such characteristic or attribute to the higher level system requirement. All specifications prepared for this ACI shall meet the requirements of MIL-S-83490, Form 1a or 1b, and the content requirements of MIL-STD-490.

ALLOCATED CONFIGURATION IDENTIFICATION
SOURCE AND SUPPORT DATA

- SYSTEM CONCEPT PAPER (OR EQUIVALENT)
- SECRETARY OF DEFENSE PROGRAM DECISION MEMORANDUM (MILESTONE I) (OR EQUIVALENT)
- TEST & EVALUATION MASTER PLAN
- DEMONSTRATION & VALIDATION PROGRAM MANAGEMENT PLAN:
  Acquisition Plan — Program Milestones/Schedules
- PROGRAM SOLICITATION PACKAGES (RFP/RFQ)/SELECTION OF CONTRACTORS:
  Statement of Work — Government CM Plan(s)
  CDRL — Federal Acquisition Regulations
  Functional Baseline — Contractor CM Plan(s)
  IRD and Specifications — Contractor Work Breakdown Structure
- SYSTEM ENGINEERING MANAGEMENT PLAN
- PARAMETRIC & FUNCTIONAL ANALYSIS RESULTS
- REQUIREMENTS ALLOCATION & PERFORMANCE BUDGET DOCUMENTS
- TRADE STUDY REPORTS
- SYSTEM SYNTHESIS PORTRAYAL (Diagrams, Models, Simulations, Drawings, etc.)
- SYSTEM HIERARCHY & SPECIFICATION TREE
- TECHNICAL PERFORMANCE MEASUREMENT REPORTS & REVIEW MINUTES
- INTRA & INTER-SYSTEM/CI INTERFACE REQUIREMENTS ALLOCATION & DESIGN APPROACH DOCUMENT
- RISK ANALYSIS & MANAGEMENT PLANS & REPORTS
- ENGINEERING SPECIALTIES REQUIREMENTS ANALYSES REPORTS
- LOGISTICS SUPPORT ANALYSIS PLAN & REPORTS
- CONTRACTOR DEMONSTRATION & VALIDATION TEST & EVALUATION PLANS & REPORTS
- GOVERNMENT DEVELOPMENT TEST & EVALUATION MASTER PLANS & REPORTS
- ENGINEERING CHANGE PROPOSALS
- CONFIGURATION CONTROL BOARD MINUTES & DIRECTIVES
- SYSTEM DESIGN REVIEW

ACI Documents

- DEVELOPMENT SPECIFICATION
- UPDATED CI/SYSTEM SEGMENT SPECIFICATION
- PRIME ITEM DEVELOPMENT SPECIFICATION
- PRODUCT SPECIFICATION (NDI) & PERFORMANCE SPECIFICATION
- SOFTWARE REQUIREMENTS SPECIFICATION
- INTERFACE REQUIREMENTS SPECIFICATION
- OPERATIONAL CONCEPT DOCUMENTATION
- LEVEL II DRAWINGS
- SOFTWARE TEST PLAN
- COMPUTER RESOURCES INTEGRATED SUPPORT DOCUMENT
- SOFTWARE PROGRAMMER'S MANUAL

Figure 2-6

The ABL consists of specifications for items requiring development and interface control documents, existing design documentation, requirements for NDI and associated software, and other documents considered necessary to control the FSD effort. If existing MIL-SPECs or MIL-STDs are to form a part of the ABL, they must be carefully tailored for application to FSD, and avoid chain referencing, which could result in imposing unnecessarily restrictive requirements.

2.5.2.2 Allocated Configuration Identification Software Documentation Development. Software documents, as outlined in DoD-STD-2167, comprise the ABL, and include:

- Final SSS;
- Final Prime Item Development Specification (PIDS);
- Final SRS;
- IRS; and,
- Software Test Plan (STP).

The review held prior to ABL establishment is the SSR. This review shall be conducted in accordance with MIL-STD-1521.

2.5.2.3 Non-Development Items. During advanced development, additional application of NDI should be expected as a result of feasibility analysis for NDI application conducted in the conceptual phase, or alternate solutions proposed. Development specifications (MIL-STD-490, Type B content) should be prepared for each newly identified NDI. Specifications for previously identified NDI should be revised as necessary to include additional, verified attributes, specific modifications and tests, and other changes to assure a system that meets all operational requirements.

2.5.3 Product Configuration Identification/Product Baseline General Requirements. FSD, and when appropriate, Low Rate Initial Production, requires the accomplishment of total system design, equipment design, manufacturing planning, inspection and test planning, etc., necessary to develop all specifications, drawings, lists, processes, and procedures to produce and accept the CI at any competent manufacturing facility (Figure 2-7). The reviews held at this phase prior to PBL establishment are the Preliminary Design Review (PDR), Critical Design Review (CDR) and Production Readiness Review (PRR). The PBL is established for a hardware and software system upon the successful completion of a FCA and a PCA.

PRODUCT CONFIGURATION IDENTIFICATION
SOURCE AND SUPPORT DATA

- DECISION COORDINATING PAPER AND INTEGRATED PROGRAM SUMMARY (OR EQUIVALENT)
- SECRETARY OF DEFENSE PROGRAM DECISION MEMORANDUM (MILESTONE II) (OR EQUIVALENT)
- UPDATED TEST AND EVALUATION MASTER PLAN

- FULL-SCALE DEVELOPMENT PROGRAM MANAGEMENT PLAN:
  Acquisition Plan
  Milestone/Schedules

- FSD RFP/RFQ-SELECTION OF PRIME OR ASSOCIATED CONTRACTORS:
  Current FCI
  Allocated Baseline
  Interface Design Specs
  Contractor CM Plan(s)
  Statement of Work
  Contract Data Requirements List
  Federal Acquisition Regulations
  Contractor Work Breakdown Structure
  Updated Government CM Plan(s)
  Contractor Interface Agreements

- DESIGN SYNTHESIS PRODUCTS
- PRODUCTION READINESS REVIEW:
  Preliminary Design Reviews
  Critical Design Reviews
  Test Readiness Reviews
  Physical Configuration Audits
  Functional Configuration Audits
  Formal Qualification Review

- LOGISTICS PLAN FOR PREOPERATIONAL SUPPORT

- CONTRACTOR FULL-SCALE DEVELOPMENT TEST & EVALUATION

- GOVERNMENT DEVELOPMENT, PRODUCTION ACCEPTANCE, INITIAL OPERATIONAL, & FOLLOW-ON OPERATIONAL TEST & EVALUATION MASTER PLANS AND REPORTS

- COMPUTER SOFTWARE VALIDATION & VERIFICATION V & V

- OPERATIONS/MAINTENANCE MANUALS & SUPPORT EQMT V & V

- ENGINEERING CHANGE PROPOSALS

- REQUESTS FOR DEVIATIONS OR AIVERS

- CONFIGURATION CONTROL BOARD MINUTES AND DIRECTIVES

PCI Documents

- PRODUCT SPECIFICATION
- UPDATED PRODUCT SPECIFICATION (NDI)
- PROCESS SPECIFICATION (TYPE D)
- MATERIAL SPECIFICATION (TYPE E)
- LEVEL III DRAWINGS
- SOFTWARE PRODUCT SPECIFICATION
- SOFTWARE TOP LEVEL DESIGN DOCUMENT
- SOFTWARE DETAIL DESIGN DOCUMENT
- INTERFACE DESIGN DOCUMENT
- DATABASE DESIGN DOCUMENT
- SOURCE AND OBJECT CODE
- SOFTWARE TEST REPORT(S)
- VERSION DESCRIPTION DOCUMENT
- COMPUTER SYSTEM OPERATOR'S MANUAL
- SOFTWARE USER'S MANUAL
- ACCEPTANCE TEST PROCEDURES
- COMPUTER SYSTEM OPERATOR'S MANUAL
- SOFTWARE USER'S MANUAL
- COMPUTER SYSTEM DIAGNOSTIC MANUAL
- UPDATED SOURCE CODE
- UPDATED OBJECT CODE
- UPDATED DEVELOPMENT SPECIFICATION
- UPDATED SYSTEM SPECIFICATION
- UPDATED SOFTWARE REQUIREMENTS SPECIFICATION
- UPDATED INTERFACE REQUIREMENTS SPECIFICATION
- OTHER OPERATIONAL BASELINE DOCUMENT DESIGNATED AS BASELINE DOCUMENT

Figure 2-7

PCI is the approved or conditionally approved technical documentation developed and finalized during FSD which defines the configuration of a CI/CSCI during the production, operation, maintenance and logistic support phase of its life cycle. It shall be used to prescribe necessary "built-to" or form, fit and function requirements for a CI/CSCI, and the acceptance tests of these requirements. The type and level of detail to be contained in the PCI should be determined, in consideration of government development costs, requirements for anticipated method of reprocurements, configuration audits, and logistics support, such as maintenance and repair policies, supply support, training requirements, etc.

2.5.3.1 Product Baseline Documentation. The PBL documentation shall include all functional and allocated configuration baseline documents, specifications, drawings, lists, processes, procedures and other requirements necessary to procure, produce and accept the end item at any competent manufacturing facility. It shall include the data required to reproduce the performance and accuracy of any test equipments/stations developed for qualification or acceptance of the item. Specifically,

a. The PBL is defined by design disclosure documentation; or form, fit, and function documentation; or some combination of the two as listed in paragraph 2.3.4.1.a. The PBL documentation normally prescribes:

(1) Product name, nomenclature, part number, and version number.

(2) All necessary physical, functional, and interfunctional characteristics of a CI/CSCI documented at a level of detail equal to the program and procurement requirements of the item.

(3) All test and inspection criteria specifications and procedures required to qualify and accept the item and its separately procureable parts.

(4) All manufacturing processes and procedures required to ensure production or assembly of an acceptable item.

(5) Design disclosure documents for specially designed test equipments, tools, fixtures, etc.

(6) Design disclosure documents for special packaging, containers, etc., required for shipping, protecting, or storage of the item and any of its repair parts.

b. The PD/PMW ensures that design disclosure for all provisioned parts is arranged so that a complete, separable procurement

package, including test/inspection requirements and procedures, is readily identifiable and available for separate procurement. Design disclosure documentation shall include specifications, drawings, lists and interfaces to the lowest level at which CI/CSCI will be maintained.

c. All specifications shall be prepared as MIL-S-83490, Form 1a or 1b, and meet the content requirements of MIL-STD-490 for the appropriate type. Appropriate hardware definition documents shall be prepared in accordance with DoD-STD-100 and meet the requirements for DoD-D-1000, Level 3, for the configuration item, and Level 2 for any required special test equipment.

d. All PBL documents shall be identified by government or contractor number.

2.5.3.2 Establishment of the Product Baseline. The approved PBL and Development Configuration (for software) shall be established after the PRR which includes the following reviews and audits conducted in accordance with DoD-STD-2167 and MIL-STD-1521.

- Preliminary Design Review (PDR) - Accomplished in the Concept Demonstration/Validation and/or the FSD phase
- Critical Design Review (CDR) - Accomplished in the FSD phase
- Functional Configuration Audit (FCA) - Accomplished at the end of the FSD phase
- Physical Configuration Audit (PCA) - Accomplished at the end of the FSD phase
- Formal Qualification Review (FQR) - Conducted at the end of the FSD phase
- Technical Evaluation/Operational Evaluation (TECHEVAL/ OPEVAL) - Required to obtain approval for production.

As a result of the PRR the contractor shall submit the preliminary PCI to the PD/PMW for review and approval. Any updates to the DDP shall be incorporated by the contractor and presented to the PD/PMW for approval and direction into the next milestone.

2.5.3.3 Product Configuration Identification Software Documentation. In addition to the FBL and ABL documentation, specific documentation shall be prepared in accordance with DoD-STD-2167 and shall include:

- Software Product Specification (SPS);
- Software Top-Level Design Document (STLDD);
- Software Detail Design Document (SDDD);
- Interface Design Document (IDD); and,
- Data Base Design Document(s) (DBDDs).

NOTE: In situations where the FSD contractor is selected to be the production contractor, and when test and evaluation needs require the FCA and PCA not to be conducted until early in production, a preliminary PBL may be defined and utilized until the FCA and PCA are completed and the final PBL is established. The preliminary PBL requirement would also be applicable to instances when urgent equipment delivery schedules must be met, and the formal PBL cannot be established prior to delivery.

2.5.3.4 Non-Development Items. The FSD or NDI evaluation phase must culminate in a set of specifications, and/or as appropriate, drawings and other documents that will ensure acquisition of NDIs capable of interoperability within the system/program, without the necessity of further development effort. All attributes of the NDIs must be determined and specified in a form which will ensure acquisition of items that will provide satisfactory performance and ensure that specified performance tests are adequate.

Items shall be described in specifications, drawings, and other documentation to the extent necessary to manufacture or procure the NDIs tested. Documentation shall include specifications, drawings and other documents to the extent necessary to enable procurement/reprocurement of NDIs and, as appropriate, required repair parts for use at specified Government maintenance levels. Specifications for NDI shall be in accordance with MIL-S-83490, Type C, Form 1a or 1b, and meet the content requirements of MIL-STD-490. Where full design disclosure is not required by the procuring activity, there should be Product Function and Fabrications specifications provided by the NDI manufacturer. Where government controlled specifications or other government controlled design disclosure define NDI, an Inventory Item Specification (MIL-STD-490, Type C4) may be sufficient. In all cases, particular care should be given to the QA provisions of the specification to make certain that all necessary test requirements for pre-production, periodic production and acceptance testing are clearly delineated and "Ordering Data" specify the requirements for pre-production samples.

In addition, product specifications or control drawings (DoD-STD-100) shall be prepared for each NDI repairable item ordered for maintenance support.

2.6 Configuration Record

As configuration baselines are established, the PD/PMW shall assure the availability of baseline description records. These records, which shall be initiated early in the development phase, and refined and updated throughout the various phases of development, define the item's configuration (hardware, software, NDI). The PD/PMW will verify the content, accuracy and completeness of these records against Contract Data Requirements List (CDRL) deliverables, program review results, meetings, and approved change proposals. The data contained in the records shall be maintained by the PD/PMW, or his designated Design Agent/SSA, in a manner that provides for continued visibility to effectively manage the configuration of the CI/CSCI. The baseline description records shall include, as a minimum, the information and data noted below. The PD/PMW may include any additional data deemed necessary and essential to manage the CI (See paragraph 2.3.4, DDP description).

a. List of the Government and contractor developed specifications, including dates, titles and revision levels;

b. Specification tree depicting all the specifications (including commercial specifications);

c. List of equipment to include all prime end items, non-complex items, and special test equipment in a top-down breakdown indentured level list to the piece part level, including all drawings developed, e.g., schematic and wiring diagrams, installation, assembly, specification control, source control, detail, parts lists, etc., specifying dates, titles and revision levels;

d. List and description of the CI/CSCIs, e.g., the functions of the antenna controller, receiver-transmitter, message switch software;

e. List of interface control documentation, e.g., between computer programs, computer hardware, WSE interfaces, etc;

f. Configuration audit results;

g. Configuration technical reviews;

h. Provisioning requirements statement;

i. List of all ECPs and their status; and,

j. List of all the Acceptance Test Procedures, Plans and Reports.

2.7 Assignment of Military Nomenclature. The following guidelines apply in the assignment of military nomenclature:

a. Military nomenclature shall be assigned to SPAWAR electronic equipments which are assembled as complete systems, subsystems, centers, centrals, sets, groups, units and kits. Equipment falling below the unit level as defined in MIL-STD-280 shall not have military nomenclature assigned;

b. Commercial items or NDIs which are selected for use in, or with, military systems shall be assigned military nomenclature;

c. New or modified equipment will not be replaced or approved for production without the assignment of an approved nomenclature; and,

d. All nomenclatured items procured under each new or follow-on production contract, or other procurement action, must have nomenclature confirmed, including items that are listed in the complement data of the equipment being confirmed.

2.7.1 Nomenclature Assignment Processing. Military nomenclature is assigned under the purview of the JETDS and in accordance with MIL-STD-196. As one of the Navy Department Control Points (DCPs), SPAWAR 003 is responsible for processing and transmitting requests for nomenclature action to the Department of Defense Control Point (DODCP), Fort Monmouth, New Jersey. SPAWARINST 4410.4 provides further guidance regarding the processing procedures for obtaining and confirming military nomenclature.

2.8 Configuration Item Marking, Numbering and Serialization

2.8.1 Marking. Each CI shall be marked as prescribed in MIL-STD-130.

2.8.2 Part Numbers. Part numbers shall be assigned in accordance with DoD-STD-100. Part numbers marked on hardware or software shall be directly relatable to the design disclosure documentation. In cases where a part may be identified by both a Government part number and a vendor part number, references to that part, including provisioning and maintenance documentation, shall specify the Government part number.

2.8.3 Serialization, Lot Numbers, Stock Numbers. Serial and lot numbers shall be assigned and marked to identify specific items uniquely. Serial numbers shall remain unchanged and unique throughout the life of the item, regardless of the number or type of changes in the item configuration or part number.

a. Each item in a family of like items may be identified by a serial number. The item shall be designated for serialization based upon the risks of change and the need for engineering, test, performance, operations, or ILS traceability. This applies to all items, whether hardware, computer program, or firmware. The serial numbers shall be unique for its family of items. Major equipment serial numbers shall be non-significant, permanent, and limited to six numeric digits sequentially assigned by SPAWAR 003 in numerical order from 1 to 999,999. When required, alpha prefixes may be added to the six digit serial number. SPAWARINST 4410.4 provides further guidance in the assignment of hardware serial numbers.

b. A family of like CIs may be designated by lot number. Lot numbers, when applied, shall be in accordance with MIL-STD-1168.

c. A National Stock Number (NSN) shall be assigned to all items introduced into the Federal Supply System in accordance with the Federal Catalog System, DoDD 4130.2.

2.8.4 Reidentification. Reidentification is required when a part or assembly is altered, causing the new configuration to be incompatible with the old configuration. In this case, a new part number must be assigned. This requirement applies to all higher assemblies non-inclusive of that assembly where interchangeability is re-established. For those items provisioned as spares, the assignment of a new NSN is required.

The designated design activity shall assign a new part number based on the requirements set forth by the user design activity drawing. Once assigned, the user design activity drawing shall contain the original item identification part number prior to the reassignment.

In those cases where items are not identified by the requirements set forth in DoD-STD-100 (i.e., more than fifteen characters), and the designated design activity is not responsible for reassignment, the design activity shall assign its own control number in order to fulfill the requirements or DoD-STD-100.

2.9 Software Identification. Identification numbers should be included on design documentation, software corrective action documents, software storage media, and within the source and executable code. Exceptions to such numbering may be required due to technological advances. For instance, software stored on large storage devices that contain software being developed does not lend itself to labeling the media. However, such devices will normally have directories that do lend themselves to the support of configuration management concerns. Automation of the

numbering of the source and executable codes is desirable to reduce the human error inherent in systems that require manually updated versions and revisions.

THIS PAGE INTENTIONALLY LEFT BLANK

3.0 TECHNICAL REVIEWS

3.1 General. The role of CM in the technical review process is to establish documentation requirements, evaluate the quality of that documentation, and ensure that the development of the CI/CSCI has reached milestone requirements and is under formal CM control.

Specifically, technical reviews are engineering design and QA functions which rely on planned applications of CM. They are a series of formal meetings held internally by the contractor during the design process to ensure that all performance and reliability requirements are met and that no design weaknesses exist that will compromise the performance, reliability, or quality of the equipment.

A principal function of technical reviews is to provide the customer and company management with data for determining the design status, identifying problem areas, approving production of hardware and commencement of coding for CSCIs, requesting changes to specifications, and establishing and ensuring execution of test programs involving different types of equipment that are combined to form a system.

3.2 Responsibilities and Objectives

3.2.1 Responsibilities. The following responsibilities are defined to assist the PD/PMW in understanding his participation in conducting technical reviews. The PD/PMW responsibilities include:

a. Ensuring timely and effective attention to the technical interpretation of contract requirements, keeping in mind that technical reviews provide visibility into the contractor's implementation of the work effort required under the terms of the SOW and the contract.

b. Selecting, in accordance with the current acquisition phase, the appropriate reviews to be held and specifying these reviews in the contract. Configuration item complexity will determine the degree to which each technical review is conducted and whether or not the technical review is conducted incrementally or at one time. The degree of reviews is also dependent upon CI/CSCI state of development (new design vs. commercial-off-the-shelf) or the degree of any modifications (i.e., new design items may require the majority of all reviews or audits, while commercial-off-the-shelf items may require limited reviews or audits with appropriate documentation).

c. Submitting documentation to be reviewed/discussed at each review well in advance to ensure a thorough evaluation with comments to be forwarded back to the contractor in accordance with contract provisions. If the most current version of the documentation has not been delivered, the review shall be delayed.

d. Requesting that the contractor provide a CM status presentation at each technical review.

e. Ensuring that all CM action items assigned during technical reviews are evaluated and completely resolved between the Government and the contractor.

3.2.2 Objectives. The objectives for the PD/PMW in applying CM to technical reviews are to:

a. Evaluate the contractor's configuration management program to ensure compliance with the contractor's CM plan as approved by the Government. Areas to be evaluated should include, but not be limited to, internal:

(1) Design disclosure practices.

(2) Control processes, including CCB and Material Review Board (MRB) operations.

(3) Engineering release procedures for approval and control of engineering documentation.

(4) Control processes for software.

b. Evaluate the interface between the contractor and the local Government representative in regard to configuration control processes and development of CI/CSCI documentation.

c. Evaluate the CM QA/quality evaluation processes and procedures.

d. Obtain assurance that the contractor is developing CI/CSCI documentation in accordance with contractual requirements; i.e., specifications in accordance with MIL-STD-490, drawings in accordance with DoD-STD-100 and DoD-D-1000, etc.

e. Identify interface documentation requirements.

f. Assure a current incorporation status of internally-approved changes.

g. Assure a current status of all specifications/drawings.

3.3 Guidance for Conducting Reviews

3.3.1 Scheduling of Reviews. The scheduling of technical reviews is extremely important. If they are conducted too early, the item for review will not be adequately defined. Conversely, if the review is too late, the program commitments could have been made erroneously, and the correction will be both difficult and costly. For planning purposes, a good method for scheduling technical reviews is to relate them to the documentation requirements. Preparation for the technical reviews occurs during the entire project and involves continually collecting data to substantiate what has been done during the project effort. Figure 2-1 contains a list of the primary documentation associated with each review and the estimated time phasing.

It is the contractor's responsibility to establish a time, place, and agenda for each review in consonance with the milestone schedule and in coordination with the PD/PMW.

3.3.2 Procedures. The PD/PMW and the contractor co-chair the review. As a co-chairperson, the PD/PMW is responsible for reviewing the daily minutes and ensuring that they reflect all significant inputs. In addition, the PD/PMW provides formal acknowledgement to the contractor of the accomplishment of each review. The PD/PMW also provides security clearance information, if required, to the contractor prior to each review.

The most important aspect of technical reviews is the corrective action items that result. These items are usually short tasks that must be completed by a project member to correct a design, hardware, software, or data deficiency. These action items are recorded and an individual is given responsibility to oversee the completion. Specific contractor procedures are further defined in MIL-STD-1521 and DoD-STD-2167. After each review, the contractor shall publish and distribute copies of the review minutes.

3.4 Types of Technical Reviews. The types of reviews outlined below are typical although other reviews may be required depending on system complexity.

a. System Requirements Review. - The SRRs are normally accomplished during the Concept Exploration/Definition phase. Such reviews may be conducted at any time but normally are conducted after the accomplishment of functional analysis and preliminary requirements allocation (operational/maintenance/training hardware, CIs, CSCIs, manufacturing considerations, personnel and human factors) to determine initial direction and progress of the contractor's system engineering management effort and his convergence upon an optimum and complete configuration. The PD/PMW

will review the total system engineering management activity and its output responsiveness to the SOW and system specifications. The contractor shall also describe his progress and problems in risk identification and reduction, trade-offs among stated system specification requirements, identifying the configuration items, and producibility and manufacturing considerations that could impact the program. The preliminary FCI is established as a result of the successful completion of the SRR and provides the basis for the FBL. Once approved, the documents forming the FBL are placed under formal Government configuration control.

b. System Design Review (SDR). - An SDR shall be conducted as the final review prior to the submittal of the Concept Demonstration/Validation phase products. The SDR is primarily concerned with ensuring that all involved understand the overall operational/support requirements, the system specification requirements, the software specification requirements, the manufacturing methods and that the system engineering management activities sufficiently define the end product.

c. Software Specification Review (SSR). - The SSR is held prior to establishment of the ABL and the start of CSCI preliminary design. It involves the formal review of the CSCI requirements as specified in the SRS and the IRS(s). Its purpose is to establish the ABL for CSCIs by demonstrating the adequacy of the SRS, IRS, and OCD.

d. Preliminary Design Review (PDR).

(1) For hardware, the PDR is accomplished in the FSD phase and consists of a formal technical review of the basic design approach for a CI or for a functionally related group of CIs. It is held after the authentication of Development Specification(s) is available and the accomplishment of preliminary design efforts, but prior to the start of detail design. Depending on the nature and the extent of the development of a CI, and provisions of the SOW, the PDR may be a single event, spread over several events, or held collectively for a group of related CIs.

(2) For computer software, a PDR is held to review the STLDD against the respective authenticated specifications for each equipment item and CSCI. Following an acceptable PDR for an item, detail design of that item begins. During this activity, engineering documentation such as drawings, product specifications, and test descriptions are produced. For computer software, detailed design is accompanied by detailed design documentation of logical flows, functional sequences and relations, formats, constraints, data bases, and incorporation of reused design.

(3) As a result of the successful completion of the PDR, the detailed designing for the FSD phase, the preliminary PCI, and the development records for each CI/CSCI are initiated. As a result of any further configuration change activity, the configuration control status accounting activities shall be continued.

e. Critical Design Review (CDR).

(1) The CDR for hardware is accomplished in the FSD phase on each CI prior to fabrication/production design release to ensure that the detail design solutions, as reflected in the Product Specification and engineering drawings, satisfy performance requirements established by the Development Specification.

(2) The CDR for software shall assure that the SDDDs, DBDDs, and IDDs satisfy the requirements of the SRS(s), IRS(s), and STLDD(s). A primary output of the CDR for software is the Government and contractor concurrence on the SDDDs that are approved for coding and unit testing. Unit test descriptions and test procedures are also reviewed.

(3) For complex/large CI/CSCIs, the CDR may be conducted on an incremental basis, i.e., progressive reviews versus a single CDR.

f. Test Readiness Review (TRR). - The TRR is accomplished in the FSD phase and consists of a formal technical review of the contractor's readiness to begin formal CSCI testing (software only). The TRR shall be conducted after software test procedures are available and complete, and Computer Software Component (CSC) integration testing is complete. The purpose of the TRR is to review the informal test results, formal test procedures, and operation and support documents with the contracting agency. Also, it will demonstrate to the contracting agency that the updated versions of the Computer System Operator's Manual (CSOM), Software User's Manual (SUM), and Computer System Diagnostic Manual (CSDM) will, in final form, adequately address the operation and support of the computer system. A primary result of the TRR is predicated on the Contracting Agency's determination that the software test procedures and informal test results form a satisfactory basis for proceeding into formal CSCI testing.

g. Formal Qualification Review (FQR). - The FQR is conducted at the end of the FSD phase to verify that the actual performance of the CI/CSCIs of the system, as determined through testing, comply with the hardware Development Specification, SSS, SRS and IRS; and, to identify the test report(s)/data which document results of qualification tests of the CI/CSCIs. When feasible,

the FQR shall be combined with the FCA at the end of the CI testing prior to PCA. As required/determined by the PD/PMW, the FQR shall be conducted for follow-on production consistent with total program needs.

h. Production Readiness Review (PRR). - This review is intended to determine the status of completion of the specific actions which must be satisfactorily accomplished prior to executing a production go-ahead decision. The review is accomplished in an incremental fashion during the FSD phase, usually two initial reviews and one final review to assess the risk in exercising the production go-ahead decision. In its earlier stages the PRR concerns itself with gross level manufacturing concerns such as the need for identifying high risk/low yield manufacturing processes on materials or the requirements. The reviews become more refined and the design matures, dealing with such concerns as production planning, facilities allocation, incorporation of producibility-oriented changes, identification and fabrication of tools/test equipment, long lead item acquisition, etc. Timing of the incremental PRRs is a function of program posture and is not specifically locked in to other reviews.

4.0 CONFIGURATION AUDITS

4.1 General. A Configuration Audit (CA) is a formal or official examination and verification of the configuration of a CI/CSCI. To ensure that the physical and functional characteristics of a CI/CSCI match those specified in the product's identification, formal CAs are performed on selected items in incremental progression leading up to establishment and validation of a PBL.

There are two types of required CAs: the FCA and PCA. The objective of an FCA is to verify that the CI/CSCIs actual performance complies with its Part I Development Specification and SRS. The FCA is accomplished through tests which verify that the item has achieved the performance specified in its functional or allocated CI documents. A PCA is a formal examination of the as-built version of a CI/CSCI against its technical documentation. CAs will be scheduled and accomplished, as appropriate, by the PD/PMW or their representatives. FCA and PCA checklists can be found in MIL-STD-1521.

4.2 Responsibilities

4.2.1 Program Director/Program Manager Warfare. The following responsibilities are defined to provide assistance to the PD/PMW in fulfilling the CA requirements placed upon him. Specifically, the PD/PMW shall:

a. Ensure that CA requirements (i.e., audit plans and minutes) are specified in the contract even though the audit is the responsibility of the Government and performed primarily by Government personnel. The contractor normally co-chairs the audit and furnishes representative personnel from each of the functional areas wherein the audit is to be accomplished.

b. Coordinate with the contractor prior to the planned CAs to ensure that they are prepared for each audit (i.e., the equipment shall be available and ready to be audited, a knowledgeable individual shall be available to disassemble the equipment and answer questions, a complete drawing package shall be available with the outstanding engineering change orders, an explanation shall be provided on how the drawings are organized, and assurance that the documentation will be available).

c. Ensure that an FCA/PCA is conducted prior to entering Milestone III on that configuration of the CI/CSCI which is representative of the configuration that will be released for production.

4.3 Guidance for Conducting Audits. It is the responsibility of the contractor to establish a time, place, and a complete DDP including, but not limited to, agenda for each audit in consonance with the master milestone schedule subject to coordination with and approval of the PD/PMW. Prior to both the FCA and PCA, the contractor shall provide the following information to the PD/PMW:

a. For hardware, a complete DDP including but not limited to, draft/final specifications (Type A through E), Level II/III drawings, interface control drawings, and test reports. For software, the final SPS.

b. The contractor representation (including the test manager).

c. Identification of the items to be audited (i.e., nomenclature, specification numbers, software version/release numbers).

d. Current listing of all approved or requested deviations/waivers against the CI/CSCI.

e. Current listing of all approved ECPs to the CI/CSCI, incorporated or not.

4.3.1 Functional Configuration Audit Scheduling. A FCA is accomplished by the PD/PMW or his designated representative prior to the PCA. If the FCA has not been completed prior to accomplishment of the PCA, the PD/PMW may conditionally approve the PCA and authorize production until the FCA is completed, provided that the key functional characteristics have been demonstrated and that other acceptance requirements have been met.

4.3.2 Physical Configuration Audit Scheduling. A PCA is accomplished by the PD/PMW or his designated representative prior to Milestone III.

4.3.3 Functional Configuration Audit Procedures and Preparation

4.3.3.1 Functional Configuration Audit Procedures. The audit team shall be composed of Government and contractor personnel. The Government audit team will consist of representatives from the cognizant PD/PMW or a SPAWAR field activity. The audit team shall be chaired by the PD/PMW or his designated representative. The FCA is conducted at the end of FSD on that configuration item which was tested for evaluation and decision authority to proceed into production was obtained. The PD/PMW is responsible for the conduct of the audit. However, he may delegate performance of the audit to another activity.

When a prototype/preproduction article is not produced, the FCA is conducted on the first production article. For those CIs whose qualification can be determined only during integrated system testing, completion of the FCA is delayed until that time. The FCA for a complex CI may be conducted on a progressive basis by auditing each of its major components on a progressive basis throughout the CI's development and culminates at the completion of qualification testing of the item, with a final review of all FCA discrepancies.

4.3.3.2 Functional Configuration Audit Hardware Preparation. The following testing information in addition to the requirements outlined in paragraphs 4.2 and 4.3 shall be available at the FCA for the audit team.

a. Test plans/procedures and acceptance test plans/procedures for the CI.

b. A complete list of successfully accomplished functional tests during which pre-acceptance data was recorded.

c. A complete list of successful functional tests if detailed test data are not recorded.

d. A complete list of functional tests required by the specification but not yet performed. (To be performed as a system or subsystem test).

e. Preproduction and production testing.

f. A complete list of unsuccessful functional tests.

4.3.3.3 Functional Configuration Audit Preparation - Software. For CSCIs, the FCA is performed on the software at the completion of CSCI integration formal testing. The FCA may be performed at the system level to authenticate the software product specification. The following additional requirements shall apply.

a. The contractor shall brief the FCA team on each CSCI being audited and delineate the CI/CSCI subsystem test results and findings. They shall also include those requirements in the development specification that were not met, the proposed solution, and an account of the ECPs incorporated and tested.

b. An audit of the Qualification Test Plans/Procedures shall be made and compared against the official test data.

c. An audit of the draft/final CI/CSCI subsystem test report will be performed to validate that the report is accurate and completely describes the development tests.

d. All ECPs that have occurred during the program shall be reviewed to ensure that they have been technically incorporated and verified during the development test program.

e. SSR, PDR, CDR, and TRR minutes shall be examined to ensure that all action items have been incorporated and completed.

f. The interface requirements and the testing of these requirements shall be reviewed for CSCIs.

g. Software test reports and software trouble reports shall be examined to determine if there are any software problems not yet corrected.

4.3.4 Physical Configuration Audit Procedures and Preparation

4.3.4.1 Physical Configuration Audit Procedures. The audit team shall be composed of Government and contractor personnel. The Government audit team will consist of representatives from SPAWAR HQ (PD/PMW) or its activities. The audit team shall be chaired by the PD/PMW or his designated representative. The composition of the audit team will depend on the nature and complexity of the CI involved. Participants may include representatives from the following disciplines:

a. Project Management
b. Configuration Management
c. Engineering
d. Integrated Logistic Support
e. Quality Assurance
f. Software Engineering

The PD/PMW is responsible for the conduct of the audit; however, he may delegate performance of the audit to another activity. The team Chairperson shall have the authority to recommend acceptance of the CI and its documentation subject to conditions/agreements of the audit, or to recommend rejection of the CI and its documentation. Reasons for rejection shall be fully documented with the specific deficiencies noted.

In the event that the audit shall incidentally disclose a workmanship problem, as opposed to a difference between CI and baseline documentation, the problem shall be referred to the Government's local representative.

While the physical audit is being conducted, a moratorium on changes shall be implemented. Prior to and during the period of the audit, all changes in the process of being incorporated into the drawings or the system shall be reviewed by the audit team.

PCAs are performed against the drawings, the CI product specification, and the SPS, to assure that the CI matches the detailed specifications and drawings used in production. The review shall include an audit of the planning and manufacturing data against the released engineering and quality control records to make sure that the "as-built" configuration is in accordance with the released documents. The approved and released technical documentation shall be complete, establish the PBL, be suitable for use in follow-on production, be satisfactory for accepting items produced, and be appropriate for operational, maintenance, and logistic support purposes.

The PCA is normally accomplished subsequent to the FCA. The PCA shall be conducted on fully assembled units and selected modular/replaceable assemblies, plus the system software. However, depending on the size and complexity of the system to be audited, the PCA can be incrementally conducted on piece parts or assemblies. The decision to incrementally audit a system must be carefully made by the PD/PMW in order to determine the most cost effective means to perform the audit. Removal of modular/replaceable assemblies for examination by the Government shall be accomplished at the Government's request.

4.3.4.2 Physical Configuration Audit Hardware Preparation. The following information in addition to the requirements of paragraphs 4.2 and 4.3 shall be available at the PCA for the PCA team:

a. CI Type B, C, D, and E specifications.

b. A list delineating both approved and outstanding changes against a CI.

c. Complete shortage list.

d. Acceptance test procedures and associated test data, and reports.

e. Level II/III engineering drawing index including revision letters.

f. Operations, maintenance, and illustrated parts breakdown manuals.

g. Proposed DD Form 250, "Material Inspection and Receiving Report".

h. Approved nomenclature and nameplates.

i. FCA minutes for each CI.

j. Findings/status of QA programs.

k. Manufacturing Instruction Sheets.

l. Review of the contractor's engineering release and change control system.

4.3.4.3 Physical Configuration Audit Preparation - Software. For CSCIs, the PCA is performed on the software prior to Milestone III and prior to release of any software for Fleet or other use. In preparation for a PCA, the contract CDRLs must be reviewed in order to determine the documents that were required to be delivered. Typical software documents that are required are listed in Figure 2-1. The following actions shall be performed on each CSCI being audited:

a. Review SPS, SRS, IRS, and other applicable specifications for completeness.

b. Review FCA minutes for recorded discrepancies that require action.

c. Review CSC descriptions in the STLDD, SDDD, and IDD.

d. Review the DBDD for data base characteristics, storage allocation, timing and sequencing characteristics, and reserve requirements.

e. Compare top-level Program Design Language (PDL) in the STLDD with low-level PDL in the SDDD.

f. Compare the PDL in the SDDD and IDD with the coded program for each CSCI for accuracy and completeness.

g. Review manuscript copy of computer programing manuals, CSOMs, CSDMs, Firmware Support Manuals, SUMs, and related positional handbooks.

h. Review computer program Version Description Document (VDD).

i. Review items b., d., g., h., j., and l. of paragraph 4.3.4.2.

j. Ensure that the object code has been delivered.

k. Review current set of program listings and PDL for each CSCI.

4.3.5 Non-Development Items. Where NDI items (including privately developed) are to be acquired by SPAWAR (or by a contractor under contract to a SPAWAR agency) as CIs for the inventory, cognizant SPAWAR activities shall perform audits to the extent necessary to:

a. Confirm that the functional characteristics of the developed items are satisfactory for the intended use.

b. Establish the PCI to be used for production and acceptance purposes (normally, the contractor-offered form, fit, and function technical documentation shall be established as the PCI).

4.3.6 Follow-on Configuration Audits. The extent to which follow-on configuration audits are to be performed is at the discretion of the PD/PMW. While follow-on audits do not establish the PBL, they may be required to verify:

a. That follow-on CIs meet their functional and/or physical characteristics and current configuration identifications.

b. The accuracy of the configuration control and status accounting processes for follow-on production, deployed, operational or support items.

4.3.6.1 Follow-on Configuration Audit Candidates. Candidates for follow-on configuration audits include items in the:

a. Full Rate Production and Initial Deployment phase made by the original manufacturer/builder after a significant number of units have been produced or a significant number of approved engineering changes have been installed.

b. Full Rate Production and Initial Deployment phase made by a new or second contractor who develops new or uses the current configuration identification. When a new contractor is to build the same equipment to an existing PBL, the procuring activity's contract shall provide for follow-on audits.

c. Full Rate Production and Initial Deployment phase which need high levels of QA, including those cases where CM discipline may have been a problem.

d. Operations Support phase in support of various operations and support managers, e.g., planning for industrial availabilities.

4.3.6.2 Conduct of Follow-on Audits. Conduct of follow-on audits will be performed in the same manner as required audits, as outlined in MIL-STD-1521.

THIS PAGE INTENTIONALLY LEFT BLANK

5.0 CONFIGURATION CONTROL

5.1 General. Configuration control is the systematic evaluation, coordination, approval or disapproval, and implementation of all approved changes in the configuration of an item after formal establishment of its configuration identification (as stated in DoD-STD-480). Configuration control shall be exercised at all echelons of SPAWAR and industry interfaces on the basis of the functional, allocated or product configuration. All affected activities shall participate in evaluating proposed changes throughout its life cycle. The intended result of configuration control is to prevent unauthorized changes, while expediting the approval of those changes that are essential or provide significant benefits to SPAWAR. Other objectives of configuration control include:

a. Identifying the total impact of proposed changes, including RFDs/RFWs.

b. Defining the processing procedures for the systematic evaluation, coordination, and timely approval or disapproval of proposed changes.

c. Defining the methods for the timely implementation of approved changes.

d. Defining the procedures for library control, including procedures for access control, archive maintenance, change history, and disaster recovery.

5.2 Responsibilities

5.2.1 Program Director/Program Manager Warfare Configuration Control Responsibilities. The following responsibilities are designed to assist the PD/PMW in understanding his role in fulfilling SPAWAR policy requirements. The PD is responsible for:

a. Organizing and conducting CCBs at the PD level, as defined in this Manual, to evaluate and approve/disapprove all proposed engineering changes (including hardware, software, RFDs and RFWs). It should be noted that CCBs are not to be conducted below the PD level. Conduct of the CCB is a PD responsibility and cannot be delegated. However, chairmanship of the PD CCB can be delegated, in writing, by the PD.

b. Ensuring that all affected functional areas including PMW engineering, material acquisition, ADP support, logistic/fleet support, and test and evaluation, where applicable, participate in evaluating proposed changes to ensure consideration of all aspects. This shall include consideration of funding and implementing actions.

c. Ensuring that any ECP and related ECPs to a CI/CSCI that will cause either an engineering or contractual change to another item or system are considered simultaneously.

d. Ensuring each proposed change which affects equipment installation at Chief of Naval Education and Training (CNET) includes an implementation schedule. Those changes which impact Technical Training Equipment (TTE) will be scheduled for immediate installation.

e. Ensuring that copies of all approved FCs be made available to Foreign Governments so they may be given the opportunity to procure field changes applicable to equipment/ systems purchased from the United States.

f. Ensuring that all approved ECPs to equipments/systems which are made after delivery of the items to the Government are designated as FCs and assigned a field change number by SPAWAR 003.

g. Ensuring that the Commandant, U.S. Coast Guard or any other U.S. Government agency using SPAWAR cognizant equipment is notified of all approved FCs and is provided with copies of applicable FCBs. In addition, ensuring that applicable funding is made available for both the procurement and installation of these FCs.

h. Ensuring completeness of field change design, testing, procurement, inventory control and preparation of installation documentation. Additionally, ensuring and certifying, in conjunction with SPAWAR 003, that all ILS documentation and material are available prior to accomplishment of the FC. If a FC is installed by agencies or contractors tasked by the PD/PMW, the PD/PMW is fully responsible for assuring that technical manuals, Planned Maintenance System (PMS) documentation, installation drawings and the Allowance Parts List (APL) are updated at time of installation. Also, the PD/PMW shall ensure that activities installing FCs under their direction report completion of installation to the FCIP for entry into the FCIP data system.

i. Initiating, upon completion of the FC certification process, a draft Engineering Information Bulletin (EIB) article in accordance with SPAWARINST 5600.6, announcing availability of the FC for installation.

j. Determining, during the ECP process, which activity will install each FC. This determination shall be made in coordination with SPAWAR 003. Utilization of the SPAWAR FCIP will be maximized to the extent considered practical. If installed by an activity other than the SPAWAR FCIP, the PD/PMW will coordinate the

installation with SPAWAR 003, and will ensure budgeting and funding for the cost of installation. The PD/PMW will also ensure that 3-M reporting procedures are followed in accordance with OPNAVINST 4790.4, and the FCIP is notified in order to maintain current status of FC accomplishment.

k. Ensuring compatibility exists between all items delivered when NDIs have been selected to satisfy the ORs (i.e., personnel training, logistic support, and maintenance).

l. Coordinating with SPAWAR 32 in defining the impact of ECPs on existing WSCIDS and WSPSs, or requirements to develop WSCIDs or WSPSs.

m. Updating design documentation to reflect changes made throughout the life of a CI/CSCI.

n. Tracking all ECPs and Major/Critical Requests for Deviations and Waivers, utilizing the Command ECP Tracking System developed by SPAWAR 003.

o. Providing SPAWAR 003 with a copy of all final ECPs and RFDs/RFWs for review prior to the conduct of the PD CCB.

5.2.2 <u>SPAWAR 003 Configuration Control Responsibilities</u>. In conjunction with the PD/PMW's configuration control responsibilities, SPAWAR 003 will assist the PD/PMW in fulfilling these requirements by assuming responsibility for:

a. Developing and implementing uniform requirements for monitoring critical milestones for the review/approval/disapproval of ECPs, RFDs/RFWs, completion of implementing actions and the status of FC installation. To maintain Command uniformity SPAWAR 003 will assign all CCB numbers which are automatically generated by this system.

b. Reviewing final ECPs, for conformance to SPAWAR policies and procedures, including field maintenance program impacts, fleet training impacts and other ILS factors, as appropriate.

c. Managing the SPAWAR FCIP to include the following:

(1) Preparing and maintaining SPAWAR policies and procedures for FC implementation.

(2) Reviewing, for content and format, all FC installation documentation, i.e., FCB.

(3) Assigning FC numbers.

(4) Directing/budgeting/funding the SPAWAR FCIP.

(5) Maintaining, staging and accounting for all FCs designated for installation by the FCIP.

(6) Coordinating FC installation scheduling with fleet and shore Commands.

(7) Authorizing commencement of FC installation when the PD/PMW has certified completion of implementing actions, material availability and ILS revisions.

(8) Documenting/reporting to the PD/PMW any deficiencies discovered during FC implementation.

(9) Maintaining records of FC installation schedules and FC installation status and reporting to the PD/PMW as required/requested.

(10) Acting as the SPAWAR central point of contact on all FC related matters.

5.3 Engineering Change Proposal Classification. ECPs shall be classified as Class I or Class II in accordance with DoD-STD-480. Class I changes are subject to Government approval prior to their implementation. Class II changes are subject to Government concurrence in classification unless otherwise directed by the procuring activity. For purposes of this manual, only routine Class I ECPs are addressed in all areas unless specifically designated otherwise.

5.4 Process Flowcharts. Detailed flowcharts of the four phase ECP process from initiation through implementation are contained in Appendix D. For purposes of this Manual, the following definitions will apply.

a. Production - An ECP which affects an equipment/system in production does not require the development of a prototype alteration prior to final CCB approval. However, this does not preclude the requirement for testing of a proposed change by the contractor prior to submission of an ECP.

b. Production/Retrofit - An ECP which affects an equipment/system in both production and operational phases shall require the development of a FC prototype.

c. Retrofit - An ECP which affects an equipment/system that is operational will always require the development of a FC prototype.

5.5 Pre-Proposal Phase

5.5.1 General. The ultimate goal of the pre-proposal phase is to provide the PMW with sufficient information in the form of a preliminary ECP to make a comprehensive evaluation of the need for a recommended change. The documentation shall provide adequate information allowing the PMW to weigh the benefits the change would provide versus its estimated cost.

5.5.2 Preparation. Prior to the submittal of a preliminary ECP, the originator is required to conduct initial investigations and analyses in the appropriate technical areas necessary to substantiate the probable need for a change in system/equipment/computer program configuration. This preliminary process will justify the considerable effort involved in preparing, processing, and reviewing final ECPs.

When justification for the need of an ECP has been determined, the originator shall submit an abbreviated DD Form 1693 (see MIL-STD-481), or similar format, to the PMW.

Upon receipt of the preliminary ECP, coordination by the PD/PMW with SPAWAR 32 is required to determine if a WSCID is affected. WSCID changes will be processed in accordance with SPAWARINST 9000.1.

5.5.3 Processing

5.5.3.1 Preliminary Engineering Change Proposal. All preliminary ECPs forwarded to the PMW must be in accordance with the distribution requirements stated on the DD Form 1423, CDRL. Included in the package forwarded to the PMW shall be the recommendations and all marked-up copies of technical reviews and comments. The PMW will review the preliminary ECP for completeness of the technical evaluation and justification as to the need for the change. If the proposed change, as outlined in the preliminary ECP, is considered by the PMW to be necessary and technically sound, the PMW will authorize the contractor/design agent to develop a final ECP. Development of the final ECP for retrofit and production/retrofit changes would include the fabrication of a FC prototype to be tested prior to the submittal of the final ECP. Results of the testing of the FC prototype would then be submitted with the final ECP, along with recommendations of the type and class of FC.

5.6 Proposal Phase

5.6.1 General. This section shall describe the procedures that precede, and result in, the preparation of a final ECP to effect alteration. Three conditions exist for proposed alterations to:

a. Equipments/systems/computer programs still in production, and none delivered;

b. Equipments/systems/computer programs that have been both delivered and are still in production; and,

c. Delivered equipments/systems/computer programs that are no longer in production.

5.6.2 Preparation. Preparation of a final ECP is not limited to the technical design, but rather it encompasses all those conditions required to formulate a "complete package" approach for the implementation of alterations. The PD/PMW is responsible for the preparation, testing, and approval of all alterations. For instance, included in the process for a retrofit alteration is the design, development, testing and approval of a FC prototype, the production of FC kits, the simultaneous development of a FCB, and revision of applicable ILS documentation. Details of this particular process, leading to the development of a final ECP, are described in the following paragraphs.

5.6.3 Prototype Design and Fabrication. The PMW will:

a. Identify the most economical and reasonable approach in the design of the alteration.

b. Coordinate with the appropriate Command if the proposed change affects equipment not under SPAWAR cognizance, i.e., requiring NAVSEA to prepare a conjunctive Ship Alteration (SHIPALT).

c. Ensure compatibility of prerequisite, conjunctive and related alterations.

d. Document step-by-step installation and testing procedures.

5.6.4 Prototype Testing. A FC prototype shall be supplied for testing prior to approval of the final ECP. The test shall be accomplished at the place of the manufacturer or at such other location as may be acceptable to the PMW. Unless otherwise specified, the test shall be performed by personnel at the same technical level as the personnel required to accomplish the FC and shall be witnessed by the PMW, or his designated representative. The following requirements apply for prototype testing.

a. Designing evaluation tests to demonstrate the adequacy of prototype design.

b. Proofing tests to demonstrate the accuracy and completeness of instructions for accomplishing the FC.

c. Verifying test procedures, which are to be used by installing activities, to ensure that the FC has been installed correctly and to verify operability of equipment and the overall weapon system after the FC has been performed. In those cases where an item is used in more than one subsystem, the preparing activity must ensure that testing covers all interface applications.

5.6.5 Prototype Proofing. Proofing of a FC will consist of both a technical and operational evaluation. Prior to prototype design approval, the preparing activity shall conduct such tests and demonstrations as necessary to ensure that the:

a. Documentation is complete and can be understood and accomplished by the personnel expected to install the FC.

b. FC can be accomplished using the material specified in the documentation, and included in the kit if required.

c. Tests contained in the documentation can be performed by the accomplishing activity and produce the required results.

5.6.6 Technical and Operational Evaluations

a. TECHEVAL - The tests and/or demonstrations required to complete a technical evaluation of all FC prototypes shall be determined by the FC change originator and concurred by the PMW. Proofing shall be accomplished on equipment(s) identical to that in the fleet (i.e., all previous applicable FCs must be installed). When proofing is at the contractor's facility, careful consideration shall be given to the effect of the nontactical environment and lack of interface equipment.

b. OPEVAL - The PMW shall direct that the FC be field proofed. Field proofing is performed by personnel from the developer and witnessed by a designated Government representative. To ensure that the activity conducting the proofing is properly notified and adequate support is provided, the PD/PMW or his designated design agent shall:

(1) Arrange and coordinate schedules for field proofing with SPAWAR 003 FCIP Coordinator.

(2) Ensure that sufficient documentation and repair parts to support the altered equipment are provided if the FC prototype is to remain installed.

(3) Ensure that the documentation has been reviewed for completeness prior to proofing.

Once the FC prototype testing is complete, the PMW is required to document the results in detail, as prescribed in procedures established by the PMW, and include a recommendation regarding the FC "Type" and "Class".

5.6.7 Field Change Classification

5.6.7.1 Field Change Types. The following "Type" designations are assigned to production FCs and indicate the extent to which parts are supplied, either as part of the kit or furnished by the installing activity to accomplish the change.

a. Type I - requires parts, all of which are included in the FC and consist of a publications package, all parts and materials, and special tools required to accomplish the change to one equipment and to revise existing equipment nameplates, publications and charts.

b. Type II - requires parts, none of which are included with the FC. This type may be either a FC consisting of a publications package, or articles for a publication providing instructions for accomplishing the FC and for correcting related publications.

c. Type III - requires parts, of which some but not all are included in the FC. The FC consists of a publication package and some parts, materials, and special tools required to accomplish the FC for one equipment and to revise existing nameplates, publications and charts.

d. Type IV - requires no parts or special tools. Type IV may consist of a publications package or articles for a publication providing instructions for accomplishing the FC and for correcting related publications.

5.6.7.2 Field Change Classes. Using the following list, the PMW will recommend who will have primary responsibility for installing the FC:

a. SPAWAR FCIP

b. Organizational (Ships' Force/Station Personnel)

*c. Navy Industrial Activities

(1) Naval Shipyards

(2) SPAWAR Depot

(3) Supervisors of Shipbuilding, Conversion and Repair (SUPSHIPS) (Contractor)

*d. Field Maintenance Activity (FMA)/In-Service Engineering Activity (ISEA)/SSA

*e. Commercial Contractors

*Note: Under these options, the PMW is required to fund the installation and coordinate the installation schedule with SPAWAR 003.

Once a recommendation has been made as to who will install the FC, a determination will be made as to the class of FC, using the following guidance:

a. Class A - A Class A FC is approved for accomplishment by forces afloat or station personnel; no installation funding is required.

b. Class B - A Class B FC requires Fleet installation funding.

c. Class C - A Class C FC normally requires industrial assistance for installation and requires the appropriate SYSCOM installation funding.

5.6.8 Prototype Approval. The FC prototype will be approved by the cognizant SPAWAR PD CCB. Approval is contingent upon the satisfactory completion of the following elements.

a. Prototype Technical Testing/Evaluation (TECHEVAL).

b. Prototype Operational Testing (OPEVAL).

c. Identification of all affected ILS elements.

d. Cost benefits analysis to determine that the amortization payback is both positive and within the remaining life cycle of the hardware. Changes required to modify operational parameters, correct interoperability problems, or correct safety hazards do not require a cost benefit analysis.

e. Determination of availability of PD funding to effect the FC.

If the FC affects interfaces with other equipment/computer programs in the same subsystem, the design agent, coordinating with other contractors as necessary, will develop tests to verify operability and performance of the subsystem.

If the FC affects interfaces between weapon systems, tests to verify operability and performance of the weapon system will be coordinated with SPAWAR 32 and be included in the documentation. These tests are known as reverification tests. Normally, the requirements for weapon system reverification tests will be noted as an implementing action resulting from the approval of a final ECP.

5.6.9 Final Engineering Change Proposal Preparation. Once the prototype has been developed and tested, the final ECP should be completed on DD Form 1692 and submitted to the PMW for processing, prior to PD CCB action. The final ECP shall clearly define its impact on interfaces, other subsystems, support equipment, computer programs, documentation, maintenance, repair, and training. A schedule for preparation of the change and the total estimated program cost increase or decrease will also be included.

5.6.10 Processing. Once the DD Form 1692 is received and the total impact of the change has been determined, the PMW will issue a Decision Memorandum (DM) (Figure 5-1) to be distributed to all who must act on, or comment on, the ECP being considered. The DM will contain sufficient information and guidance to permit all recipients to proceed immediately with their respective tasks so benefits of concurrent actions may be realized. Final ECP processing begins upon issuance of the DM. The PD/PMW will provide a copy of all DMs to SPAWAR 003.

5.6.10.1 Engineering Change Proposal Processing Time. The following DM/ECP processing times will be adhered to:

Category	DM	ECP
Emergency	N/A	24 hours
Urgent	5 calendar days	15 calendar days
Routine	10 calendar days	45 calendar days

5.7 Configuration Control Boards

5.7.1 General. CCBs are held at the PD level and are the sole authority for the approval, disapproval and deferral of all hardware and software Class I ECPs and critical/major RFDs and RFWs. The following sections delineate processing and organizational methods to assist the PD in maximizing the efficiency and effectiveness of a CCB. While certain points are recommendations, other procedures are mandatory and are so stated.

From: PMW 161
To: Distribution

Subj: ABC Corporation ECP 1001; Fast Time Analyzer System (FTAS).

NOTE: Be sure to include the originator's name in the subject.

Ref: (a) SPAWARINST 4130-1M

1. In accordance with procedures contained in reference (a), a preliminary evaluation of subject ECP has been conducted with appropriate SPAWAR personnel and is hereby _X/ recommended _X/not recommended for Configuration Control Board (CCB) processing.

2. The purpose of this change is to improve the functional and mechanical design of the Fast Time Analyzer System (FTAS), AN/UQX-5(V)2.

3. Appropriate SPAWAR codes are requested to complete CCB staffing actions according to the following guidance.

a. CCB Change Request/Directive information required by PMW 161
b. CCB Meeting Target Date: 10 May 1988
c. Desired PRoduction Effectivity: S/N B42 through B56
d. Desired Retrofit Effectivity: N/A
e. Contractor Assigned Priority: Routine
f. SPAWAR HQ Routing Priority: Routine
g. Funding Required: Production _____
Field Change _____

4. Other specific information or directions:

NOTE: Decision Memorandum shall be initiated at least 30 days before the scheduled CCB Meeting to allow sufficient time for staffing by all affected agencies.

5. (When Applicable) By copy of this letter and subject ECP, the applicable FMS governments operating (Type/Model/Series) equipments are advised of U.S. Navy action on the subject ECP. Foreign Military Sales (FMS) governments desiring field change materials are requested to advise SPAWAR, Attn: (Code) and identify kit quantity and funds no later than (Date).

Distribution:
(As designated by PMW)
SPAWAR 003

SAMPLE DECISION MEMORANDUM
Figure 5-1

5.7.2 Preparation for Configuration Control Board Action. The following final ECP actions are mandatory and outline the participants' processing responsibilities prior to the CCB:

a. PMW

(1) Receives and reviews the final ECP, issues a DM, and schedules a CCB. At this point, the PMW will have entered the ECP into the SPAWAR Tracking System (see Chapter 6) and a CCB number will have been automatically assigned by SPAWAR 003.

(2) Ensures that a Change Control Review Board (CCRB) has been convened for all final Class I ECPs. These CCRBs are conducted by a designated SPAWAR field activity/design agent, to ensure that all ECP requirements are fulfilled prior to PMW review and PD CCB approval. The CCRB, in performing the review, will complete the ECP Checklist (Figure 5-2) and forward the completed checklist to the cognizant PMW, along with its recommendation for approval/disapproval/deferral. Although CCRBs do not have approval/disapproval authority, this evaluation is an essential technical review requirement in the ECP review process.

(3) Continues a thorough engineering review which began in the pre-proposal phase with the preliminary ECP. A determination of any other service users of items affected must be coordinated by the PMW. Then, the PMW must coordinate with the appropriate activities to verify the adequacy of any tests and evaluations that may have been accomplished. If the PMW finds that additional testing is required, coordination with the appropriate PMW test site must be performed, and approved procedures established.

(4) Ensures copies of all related ECPs are provided in the ECP package for distribution. Detailed requirements for the processing of related ECPs are contained in DoD-STD-480.

(5) Coordinates with cognizant personnel prior to the CCB to ensure that all required personnel are in attendance. This is especially true for ECPs affecting another SPAWAR Program Office, Command or Service.

(6) Rejects any ECPs which require additional information from the originator which cannot be provided within 45 days.

(7) Coordinates all proposed safety changes with the Safety Division (SPAWAR 003). Figure 5-3 must be completed and approved by the Safety Division. In addition, the CCB Request/Directive, when completed, will be hand carried through the applicable action codes to reduce processing delays.

ENGINEERING CHANGE PROPOSAL CHECKLIST

DATE CHECKLIST PREPARED:_____ ECP DATE: _____

ECP NUMBER: _____ SUBMITTED BY: _____

SUBJECT:

HAVE THE FOLLOWING ASPECTS OF THE CHANGE BEEN EVALUATED AND PROVIDED IN THE ECP:

a. Is sufficient detail provided regarding the proposed change and solution? Y___ N___
b. Have alternative solutions to solve problem been discussed? Y____ N___
c. Have tests been conducted to demonstrate the ECP solution? Y____ N___
d. Are test results adequately detailed in the ECP? Y____ N___
e. Are all related changes/modifications to test, support, and computer programs identified in the ECP? Y____ N___
f. If field change kits are required, are the types and quantities stated? Y____ N___
g. Has serial number effectivity and location (for both production and/or retrofit) been addressed? Y____ N___
h. Does the ECP affect PTD, PRS, APL, and PSD? Y____ N___
i. Have updates to PTD, PRS, APL, and PSD been considered? Y____ N___
j. Have the affects on Technical Manuals been considered? Y____ N___
k. Have the affects on NTPs, training devices and curriculum been considered? Y____ N___
l. Have the effects on TRS, TPS, jigs/fixtures, and PMS been considered? Y____ N___
m. Has revision/update been considered for the ILSP, OLSS, Maintenance Plan, drawings, specifications and ATP? Y____ N___
n. Have possible changes to nomenclature been addressed? Y____ N___
o. If proposed change is a hardware change, is a change to software required? Y____ N___
p. If proposed change is a software change, is a change to hardware required? Y____ N___
q. Have affects on software specifications or other software changes required been considered? Y____ N___
r. Does the ECP include complete field change kit evaluation results? Y____ N___
s. Does the ECP include the draft field change bulletin? Y____ N___
t. Have all affected inter- and intra-system interfaces been addressed? Y____ N___
u. Is there an impact if the ECP is disapproved? Y____ N___

Other Comments:

Board Recommendation: Approval _____
Disapproval _____
Deferral _____

Signed: CCRB Chairman: _____

Figure 5-2

CODE _____ DATE _____

SYSTEM SAFETY ASSESSMENT FORM

1. ECP: _____ (ORIGINATOR) _____ (ECP NO.)

2. ECP TITLE: _____

3. SAFETY PROBLEM: (BRIEFLY SUMMARIZE) ☐ HARDWARE ☐ SOFTWARE ☐ FIRMWARE _____

4. JUSTIFICATION: (ENCLOSE MESSAGES/LETTERS CITING ACCIDENTS, INCIDENTS, QUALITY DEFICIENCY REPORTS, STATISTICAL DATA OR OTHER IMPACT INFORMATION)

5. RISK ASSESSMENT: A RISK ASSESSMENT PROCEDURE COMMENSURATE WITH THE SYSTEM SAFETY REQUIREMENTS SHALL BE DEVELOPED TO ESTABLISH PRIORITIES FOR CORRECTIVE ACTION AND RESOLUTION OF IDENTIFIED HAZARDS. PLACE AN "X" IN APPLICABLE BOXES. (SEE MIL-STD-882A FOR FURTHER INFORMATION)

a. HAZARD SEVERITY:

☐ CATEGORY I—CATASTROPHIC (DEATH OR SYSTEM LOSS)
☐ CATEGORY II—CRITICAL (MAJOR INJURY/DAMAGE)
☐ CATEGORY III—MARGINAL (MINOR INJURY/DAMAGE)
☐ CATEGORY IV—NEGLIGIBLE (NO INJURY/DAMAGE)

b. HAZARD PROBABILITY:

☐ A (CONTINUOUSLY EXPERIENCED IN THE FLEET)
☐ B (OCCURS FREQUENTLY IN THE FLEET)
☐ C (OCCURRED SEVERAL TIMES IN THE FLEET)

c. RISK ASSESSMENT CODE:

☐ SEVERE (IA, IB, IIA)
☐ MODERATE (IC, IIB, IIIA)
☐ ROUTINE (IIC, IIIB, IIIC)

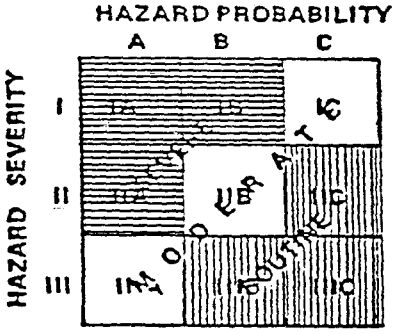

RISK ASSESSMENT CODE

6. ACTION:

☐ A BULLETIN (HAS BEEN) (WILL BE) ISSUED TO CONDUCT A ONE-TIME INSPECTION AND PROVIDE INTERIM MAINTENANCE ACTION. ☐ MESSAGE ☐ EIB ☐ (_____)

☐ IMPLEMENT VIA ISSUANCE OF A TECHNICAL DIRECTIVE OR FIELD CHANGE KIT.

☐ RAPID ACTION CHANGE FOR TECHNICAL MANUALS OR MRCs. ☐ MESSAGE ☐ SPEEDLETTER

☐ OTHER ACTION:

POINT OF CONTACT: CODE _____ NAME _____ PHONE _____

CONCURRED: ☐ YES ☐ NO Safety Division _____ CODE

SAFETY OFFICE _____ CODE _____ DATE

Figure 5-3

(8) Prepares a CCB Directive for distribution to the appropriate CCB members and ensures that a copy of the ECP is forwarded to SPAWAR 003. (Sample CCB Request/Directive and instructions for preparation of the form are contained in Appendix E.)

b. Program Director/Program Manager Warfare Integrated Logistics Support Manager - Upon receipt of the ECP package, the Integrated Logistics Support Manager (ILSM) will ensure that all logistics impacts have been addressed (i.e., QA, Reliability/ Maintainability, Technical Publications, Training, Maintenance/ Depot, Provisioning, Computer Resources), and will provide a summary of impacts. If the ECP lacks required logistics impacts, the ILSM will notify the PMW so the necessary revisions to the ECP may be requested prior to the CCB. This is essential since implementation will not be permitted until all impacts are identified and addressed.

c. SPAWAR 003

(1) SPAWAR 003 will review all final ECPs/RFDs/RFWs for compliance with the policies and procedures of this instruction.

(2) As required, the SPAWAR Safety Officer, the FC Coordinator, and the Value Engineering Program Administrator shall review final ECPs prior to PD CCB action.

d. Action Codes - Once a DM is received, the action codes (i.e., contracts, financial, interface, etc.) will conduct a detailed evaluation of the ECP and provide input into the required CCB Request/Directive forms, implementation schedules and financial summaries.

5.7.3 Configuration Control Board Request/Directive. When the CCB Request/Directive package is completed and returned, the PMW will review the package ensuring that prior to PD CCB action the following requirements have been met:

a. All technical coordination has been conducted.

b. A CCRB has been conducted for all ECPs.

c. Verification that ECP pricing is current and all required funds have been identified in accordance with the planned implementation schedule.

If the preceding requirements are in order, the PMW will indicate technical approval by signing Block 33 of the CCB Request/Directive package.

5.7.4 Configuration Control Board Request/Directive Processing Time. Every effort will be made in processing the ECP to meet the date when contractual authority is needed as indicated by the contractor in Block 47 of the ECP, DD Form 1692. If unrealistic, the originator will request that the contractor provide a new date in writing. The CCB Request/Directive forms for Class I ECPs will be processed within 45 calendar days for Routine, 15 calendar days for Urgent ECPs, and 24 hours for Emergency.

5.7.5 Configuration Control Board Responsibilities

5.7.5.1 Responsibilities of Configuration Control Board Chairman. The PD, as Chairperson of the CCB, is responsible for:

a. Scheduling and conducting CCB meetings.

b. Providing members with SPAWAR policy and guidance to ensure complete consideration of all aspects of the proposed change, including cost.

c. Directing appropriate members, as necessary, to provide information required to facilitate consideration of a proposed change.

d. Making a decision after all essential information/impacts have been presented, for a valid and complete judgement on the subject.

e. Deferring a decision until additional information and/or test results are obtained.

f. Ensuring that necessary and specific required implementing assignments are made.

g. Signing the CCB Change/Request Directive indicating matters considered, decisions made and implementing actions assigned.

5.7.5.2 Responsibilities of Members. Participating members' responsibilities will include:

a. Reviewing and evaluating the proposed change prior to the CCB meeting.

b. Attending CCB meetings or presenting their positions in writing for consideration.

c. Recommending disposition of proposed changes presented on the CCB agenda.

The cognizant PMW is responsible for making known all data, limiting factors, and other information for complete evaluation of the ECP.

5.7.6 Configuration Control Board Action. The ultimate goal of a CCB is to approve/disapprove or defer proposed changes. In doing so, the PD should verify and review all data contained in the completed CCB directive. Each block will be thoroughly discussed, for cost, funding, all field change actions, foreign applications, and logistic impacts. CCB operations will be organized and have an agenda to expedite matters in order to comprehensively evaluate the ECP.

During the CCB, the PMW (or his designated representative) provides an overview of the change and discusses the applicable information as presented in the CCB Request/Directive. All CCB members will participate in the review addressing their specific areas as well as overall concerns in other areas. The PMW will be responsible for recording all decisions and providing copies of the minutes to all CCB members and all affected activities/codes responsible for implementing actions. The PMW is also responsible for updating the ECP Tracking System with the results of the CCB meeting.

Once a thorough CCB discussion has been completed on an ECP presented with sufficient information to support a decision, one of the three following actions will result:

a. Approve the ECP. The final directive then becomes the basis for the development of contract modifications. It also documents the results of the CCB and is the official document for all activities/agencies identified in Block 35 of the Directive. Functional organizations will ensure that all required correlative actions are accomplished. Ultimately, PMWs are responsible for monitoring implementation status of changes applicable to their own equipment/system.

b. Disapprove/cancel and send back to the originator. The originator may resubmit it later when more information is obtained or circumstances change.

c. Defer action on those ECPs requiring further analysis or impact assessment. The PD CCB will assign action to a designated activity to conduct further analysis/impact. These ECPs will be placed on subsequent CCB agendas for action.

5.7.7 Pricing of Changes. It is DoD policy to encourage the issuance of bilateral, fully priced contract modifications and to minimize the use of unilateral change orders. In the absence of a fully priced modification, a maximum price or ceiling will be

established prior to execution of the modification. The PMW must be aware of and avoid an uncertain and inaccurate definition of the scope of the change that may cause an underestimation of the cost of the proposed change.

5.7.8 Cancellation of Configuration Control Board Approved Changes. To cancel a CCB approved change, the originator must prepare and process a revision to the CCB Change Request/Directive that will document the reason(s) for cancellation and deletion of the requirement for the change. All implementing actions must be either withdrawn or cancelled and the originator must notify all concerned to withhold issuance of implementing documents. The PD CCB will be reconvened to formally cancel the ECP.

5.7.9 Configuration Control Board Change Request/Directive Revisions and Distribution. Minor changes to CCB Change Requests/Directives may be made at CCB meetings. ECP revisions or corrections received after implementing instructions have been issued, require the processing of a CCB Change Request/Directive revision (i.e., R-1, R-2, etc.).

The CCB revisions must be distributed to the appropriate activities after approval. Specification Change Notices (SCNs) and Notices of Revision (NORs), with attachments, are sent to the PMW data manager, who is responsible for ensuring that documentation updates are complete.

5.7.10 Records and Files

a. CCB Change Requests/Directives. Master copies of CCB Change Requests/Directives, copies of ECPs, and copies of related implementing correspondence must be retained by cognizant PD/PMWs.

b. Contract Files. The SPAWAR Contract Files and Distribution Branch maintains the official contract files and related documents. In order to ensure a complete contract file, copies of all correspondence related to an ECP, such as requests for updated price quotes, must bear the applicable contract number and ECP number and be forwarded to the SPAWAR Contract Files and Distribution Branch for inclusion in the official contract file.

c. Historical Archives. A historical archive containing the change history will be maintained by the cognizant PD/PMW.

5.7.11 Sample Configuration Control Board Organizational Structure. The CCB shall consist of experienced, qualified personnel from each functional area who are formally designated by their superiors to serve as members. The following is a representative structure provided as a recommendation to assist the PD in determining CCB members and their areas of responsibilities.

Member Structure:

Chairman	PD or his Designated Representative
Participating Members	Engineer or Designated Representative
	PMW or Designated Representative
	Integrated Logistics Support Manager -Computer Resources -Maintainability -Maintenance/Depot -Provisioning (Supply Support) -Quality Assurance -Reliability -Technical Publications -Training
	Field Change Coordinator (003)
	Value Engineering Program Administrator (for VECPs only)
	System Safety Officer (003)
	PD/PMW Financial Manager
	CM Coordinator (003)
	Contract Administrator (12)
	Other Program/Command/Service Representative
CCB Secretariat	Recorder/Secretary

5.8 Processing, Review and Approval of Deviations and Waivers. Deviations and waivers shall be prepared by the contractor on DD Form 1694, or other form or format approved by SPAWAR 003. (Copies of all contractor-originated major/critical RFDs/RFWs must be sent to SPAWAR 003 for entry into the Product Deficiency Reporting and Evaluation Program (PDREP), part of the Contractor Evaluation System (CES).) The request shall contain sufficient technical support information to allow a comprehensive analysis and recommendations for decision at subsequent levels of review and approval.

5.8.1 Major/Critical Deviations and Waivers. Unless otherwise specified by SPAWAR, major/critical RFDs/RFWs shall be submitted and processed in the same manner as Class I ECPs, and can be granted only by a Government contracting officer, after PD CCB approval. Review and approval within SPAWAR shall be in accordance with PD CCB procedures.

5.8.2 Minor Deviations and Waivers. Unless otherwise specified be SPAWAR, minor RFDs/RFWs shall be submitted and processed in the same manner as Class II ECPs, e.g., reviewed by a local government representative for concurrence in classification. Approval of minor RFDs/RFWs shall be granted by the local MRB when such a board is properly constituted, or in the absence of a MRB, by the local Government contract administration office.

5.8.3 Delegation of Approval Authority. The above outlined processing and approval procedures are standard, in accordance with DOD-STD-480 and MIL-Q-9858 provisions. However, it is the responsibility of the cognizant PD/PMW to make a conscientious decision regarding the processing and approval of deviations and waivers, and to invoke decisions made in appropriate contractual documents. For example, if the PD/PMW wishes to delegate approval authority for minor deviations and waivers to a designated design agent or ISEA, the contractual document(s) must specifically state the delegation of approval authority. Copies of RFDs/RFWs where approval authority has been delegated to the field level shall be provided to the appropriate SPAWAR PD/PMW for information and retention. In addition, letters delegating approval authority for deviations and waivers shall be initiated by the cognizant PMW and signed by the PD. Copies of all delegation letters shall be provided to SPAWAR 003 for information and retention.

The PD/PMW will not delegate approval authority for major/critical deviations and waivers. The PD CCB shall make the final decision, utilizing the same processes as those for Class I ECPs.

5.9 Production Phase

5.9.1 Field Change Production. It shall be noted that as depicted in the flowcharts, production of a FCB occurs simultaneously with the manufacturing/procurement of the field change kit. Data included in the FCB shall be gathered during the proposal phase. Any impact on logistics shall also be documented and addressed in the final ECP. Field change production procedures shall be in accordance with MIL-F-17655 and the following policies apply:

a. Approved FCs which are urgent in nature and/or do not require furnished materials or parts, and if directed by the CCB, may be implemented on an expeditious basis.

b. Approved FCs that do not require manufactured parts will require a FCB in accordance with Appendix F of this manual.

c. Approved FCs requiring parts to be manufactured will require the PMW/designated design agent to contract for the production, either through a field activity or manufacturer.

d. All FC kits developed in accordance with MIL-F-17655 shall have a first article inspection to ensure the adequacy of all material and documentation. Upon completion of first article inspection, full production can commence. Inspection and acceptance is again required after full production and delivery of the FCs.

5.9.2 Field Change Bulletin Preparation. A FCB shall consist of descriptive data, illustrations and step-by-step procedures to accomplish a FC requiring furnished parts or materials. FCBs shall contain the following information and shall follow the format of Appendix F.

a. Planning Date - This section shall contain two sections reflecting the following information:

Section 1

(1) Name and address of cognizant Command or Agency.
(2) FC number.
(3) NSN for FC (when required).
(4) Title - brief statement of purpose and effect of change.
(5) FC Type.
(6) FC Class.
(7) Operational vs. Non-operational change.
(8) Estimated Manhours required to accomplish the FC.
(9) Accomplishment Priority - list of any other prerequisite to be installed.
(10) List of equipment affected.
(11) Name and address of contractor or Government preparing activity.
(12) Contract or project order number (if required).
(13) Security Classification (if applicable).
(14) Publication number assigned by approval letter.

Section 2

(1) Distribution Statement - notes the conditions of availability of bulletin.
(2) Purpose - technical elaboration of title.
(3) Prerequisite FCs.

(4) Effect on nomenclature (if applicable).
(5) Indication of Accomplishment.
(6) Accomplishment Plan.
(7) Proposed Installation/Availability Plan.

b. Field Change Description - This section shall contain the following information:

(1) List of hardware.
(2) List of Tools and Test Equipment.
(3) List of software provided.
(4) List of documentation provided.

c. Accomplishment and Configuration Data - This section shall contain the following information.

(1) Pre-installation Test Requirements.
(2) Installation Procedures.
(3) Post-Installation Test Requirements.
(4) Equipment Configuration Impact.
(5) Software Configuration Impact.
(6) Report of Accomplishment.
(7) Disposition of Replaced Units/Material.

d. Spares Impact - This section shall contain any information regarding the modification or replacement of spares.

e. Integrated Logistic Support Impact - This section shall contain a thorough analysis of all ILS impacts involved as a result of the FC. Approval of the FCB will not be granted unless this section is complete.

5.9.3 Field Change Bulletin Processing Procedures. It is the cognizant PMW's responsibility to approve FCBs after reviewing and ensuring all appropriate SPAWAR codes' comments and recommended changes have been incorporated. The processing procedures are as follows (Figure 5-4):

a. PMW

(1) Receive draft FCB from submitting activity (contractor or field activity and/or design agent)

(2) Perform review of draft FCB, for technical completeness and compliance with policy and procedures of this manual.

(3) Upon completion of review, forward draft FCB, with comments, to SPAWAR 003.

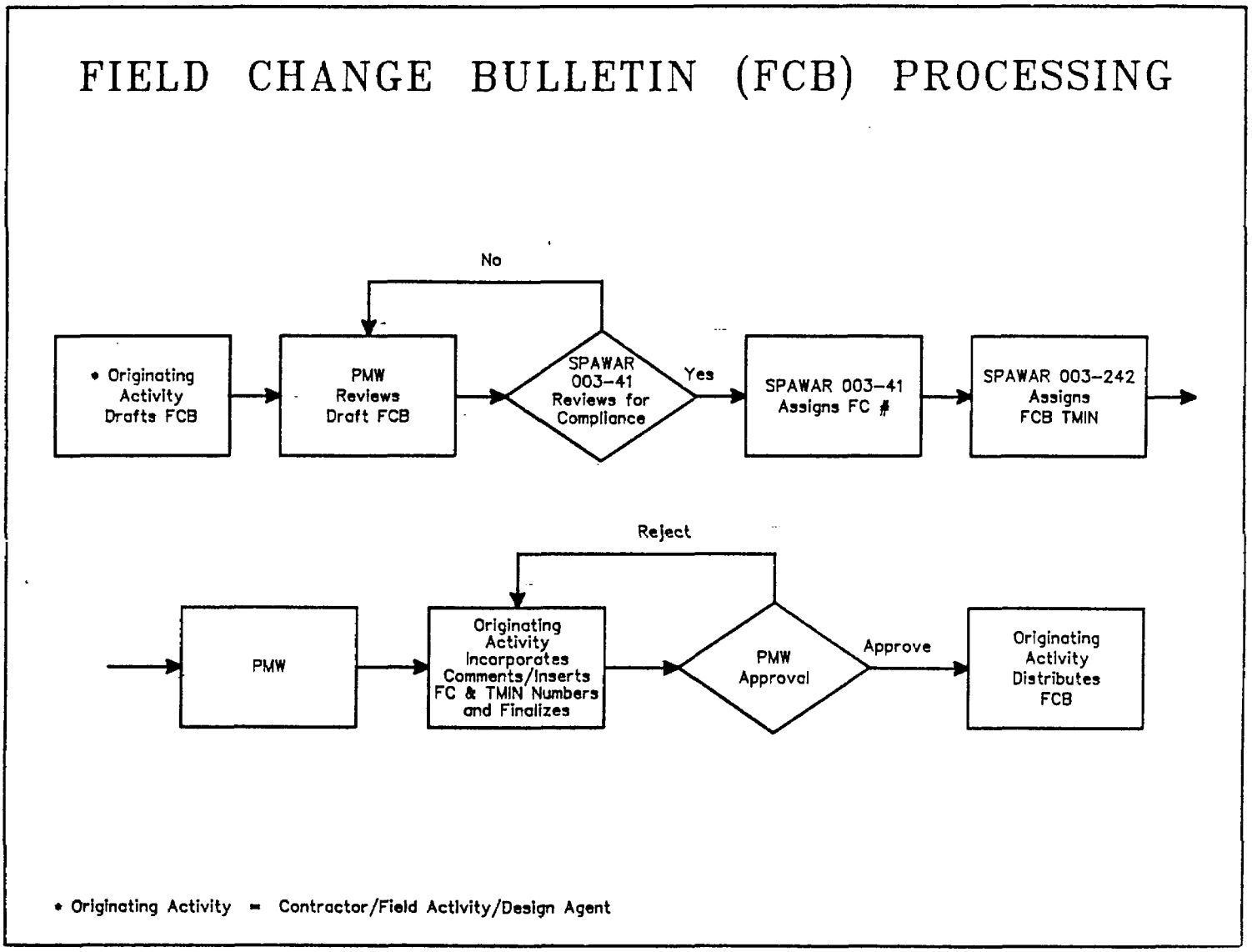
FIELD CHANGE BULLETIN (FCB) PROCESSING
No
• Originating Activity Drafts FCB
PMW Reviews Draft FCB
SPAWAR 003-41 Reviews for Compliance
Yes
SPAWAR 003-41 Assigns FC #
SPAWAR 003-242 Assigns FCB TMIN
Reject
PMW
Originating Activity Incorporates Comments/Inserts FC & TMIN Numbers and Finalizes
PMW Approval
Approve
Originating Activity Distributes FCB
• Originating Activity = Contractor/Field Activity/Design Agent

Figure 5-4

b. SPAWAR 003

(1) SPAWAR 003 will review the FCB upon completion of PMW processing, for compliance with the requirements of this instruction. If the FCB is acceptable, a FC number will be assigned. When the FC number has been assigned, SPAWAR 003 will assign a Technical Manual Identification Number (TMIN) to the FCB. This process can only occur after assignment of the FC number. When the TMIN has been assigned, the FCB, along with the FC number and TMIN number, will be returned to the PMW. If the FCB is not acceptable, it will be returned to the PMW for corrective action.

c. PMW

(1) Upon receipt of the FCB from SPAWAR 003, the PMW will return it to the originator for incorporation of all comments and insertion of the FC and TMIN numbers. Upon completion, the originator will submit the final FCB to the PMW for approval.

(2) The PMW will approve the FCB and direct the originator to distribute the FCB in accordance with paragraph 5.11.

5.9.4 Engineering Information Bulletin Field Change Articles. Type II and Type IV FCs may be promulgated as an EIB FCB for minor safety changes only. These are relatively simple changes consisting of publication material required to accomplish the FC. Type II FCs, which require the installing activity or the ship to provide any material or parts, shall be promulgated only after specific approval is given by SPAWAR 003.

5.9.5 Engineering Information Bulletin Field Change Approval. To process an ECP as an EIB, the following conditions must be met:

a. No impact on WSCIDs or WSPSs.

b. No conjunctive SHIPALTs required.

c. Change confined to interior of nomenclatured equipment.

d. CCB approval.

e. A FCB prepared in accordance with this manual.

f. Assignment of FC number.

g. Logistic support elements revised.

h. Reporting requirements imposed on installing activity.

i. Parts required are readily available at the organizational level.

5.9.6 Packaging, Marking and Shipping Preparation. The packaging, marking, and shipping of FC kits will be accomplished in accordance with the requirements of MIL-F-17655.

5.10 Certification

5.10.1 General. The primary purpose of the certification process is to ensure that a FC is ready for installation and can be logistically supported. The PD/PMW will not proceed into the accomplishment phase until a certification agreement between the PD/PMW and SPAWAR 003, using Figure 5-5, has been completed.

5.10.2 Procedures. The certification process must be initiated by the PMW after the following actions have been completed:

a. Completion/close-out of all implementing actions assigned by the PD CCB. As these implementing actions are completed, the ECP Tracking System will be updated.

b. Approval of the FCB by the PMW.

c. Identification of the designated primary installing activity.

d. Update of all applicable ILS and design disclosure documentation.

e. Availability of all significant support (e.g. technical manuals, spare parts, tooling, etc.) at support sites and supply centers.

5.11 Field Change Bulletin Distribution. Distribution will not start until the certification process has been completed by both the PD/PMW and SPAWAR 003. The PMW will ensure that the final FCB is distributed to the following activities:

a. FCIP (NAVELEXENGCEN San Diego, NAVELEXENGCEN Charleston)

b. SPAWAR Designated Depots

c. SPAWAR 003

d. Foreign Governments (as required)

CERTIFICATION FORM

1) Affected Nomenclature: _____

2) CCB Number: _____ _____ _____

3) ECP Number: _____ _____ _____

4) Related ECP Numbers: _____ _____ _____

5) FC Title: _____

6) FC Number: _____

7) FCB Number: _____

5) Designated Primary Installing Activity: _____

This is to certify that all required actions, as outlined in paragraph 5.10 of SPAWARINST 4130-M, have been completed.

_____	_____
PMW Signature Title/Code	PD Signature Title/Code
_____	_____
Date	Date

SPAWAR 003 Authorization for FC Installation

Approval _____ Date _____

Disapproval _____ Date _____

Comments:

_____

SPAWAR 003 Signature
Title/Code

_____

Date

Sample Certification Form
Figure 5-5

e. U.S. Coast Guard/Other Government Agencies (as required)

f. SPAWAR TDC (NAVELEXENGCEN Portsmouth - Code 750)

g. Navy Publication and Forms Center (25 copies)

5.12 Accomplishment Phase

5.12.1 General. The accomplishment phase sets forth the procedures, responsibilities, and controls for accomplishment/installation of approved alterations, and the reporting of accomplishment. The procedures and responsibilities are set forth in the following section.

5.12.2 Implementation. To provide configuration control and to ensure adequate fleet support in the areas of maintenance, training, and supply, it is essential that procedures be established by each Fleet Command and shore activity to ensure compliance with the requirements of this manual for field change/retrofit alterations. For production alterations, it is imperative that the PD/PMW implement contractual procedures in order to track accomplishment. To reach this objective, the PD/PMW must ensure that the production contractor utilizes effective status accounting procedures and that the contract contains the requirement for the procurement of status accounting data that will provide accomplishment of alterations by serial number.

5.12.3 Field Change Accomplishment. When a FC has been certified by the cognizant PD/PMW as being ready for installation (i.e., kits, if required, have been delivered, FCB is completed, and all ILS is revised and in place) and authorized for installation by SPAWAR 003, an EIB announcing the availability of the FC will be published. The PD/PMW is responsible for drafting the EIB article in the format prescribed in SPAWARINST 5600.6. The article is to state that the FC is authorized by SPAWARSYSCOM and designate the activities authorized to perform the installation. Additionally, each new FC EIB article will describe all previously authorized FCs for the affected equipment. The following are methods for installing authorized FCs on SPAWAR cognizant systems/equipments.

a. SPAWAR Field Change Installation Program. The FCIP is directed by the Commander, Space and Naval Warfare Systems Command and is managed by SPAWAR 003. To implement the FCIP, there are two designated facilities; one on the East Coast (NAVELEXENGCEN Charleston) and one on the West Coast (NAVELEXENGCEN San Diego). FCIP installation execution management for both the East and West Coasts is assigned to NAVELEXENGCEN San Diego, who is responsible for program functional operations, as follows:

(1) Developing program plans and budget requirements for submittal to SPAWAR 003 for funding.

(2) Interfacing with and maintaining liaison with Navy Fleet and Shore Commands, the Military Sealift Command (MSC) and U.S. Coast Guard Commands with regard to scheduling of FC installation by FCIP and all other SPAWAR agencies and contractors.

(3) Managing FC installation for all FCs designated for FCIP installation, including special tasks.

(4) Initiating action and providing technical input to resolve SPAWAR FC discrepancies and problems.

(5) Maintaining records of FC kit availability/usage, developing requirements for additional FC kit procurement, and submitting requirements to the cognizant SPAWAR PMW, via SPAWAR 003.

(6) Providing all revised technical support documentation required for the installed FCs. This includes technical manual revisions, PMSs, APLs, drawings and all other on-board ILS.

(7) Providing input into the FCIP data base which reflects the configuration of all SPAWAR cognizant equipment and the actual FC status by serial number and last-known location. The data base will provide direct input to the Command CSA System managed by SPAWAR 003.

(8) Maintaining schedules of all ship and shore activities to enable installation of FCs at the earliest opportunity by FCIP or other designated agencies or contractors.

(9) Installing any FC designated for installation by ship/shore personnel which has not been installed prior to the FCIP visit.

The FCIP supports SPAWAR cognizant electronics equipment/systems installed throughout the Fleet and selected shore activities. The FCIP ensures the systematic installation and logistics support/documentation update for authorized FCs. To fulfill these requirements, ship and shore activities are periodically scheduled for FC validation and ILS review to determine the configuration status of equipment and identify ILS deficiencies. At this time, outstanding FCs are installed and ILS deficiencies are corrected. The cycle of these visits is predicated on the availability of funds, the need specified by the fleet/shore activity and availability of material.

Funding for the FCIP is the responsibility of SPAWAR 003 and is provided from the Fleet Modernization Program (FMP) for the Navy, MSC and Coast Guard ships.

b. Alteration Installation Teams. If activities are tasked by the PD/PMW to form AITs, the AITs are to coordinate installation schedules through the FCIP Area Manager, NAVELEXENGCEN San Diego. For all practical purposes, the AIT is a FCIP team and will therefore utilize the same procedures as the FCIP in terms of performing pre- and post-installation testing, installing FCs in accordance with the FCB, and reporting installation in accordance with the 3-M manual. Additionally, the AITs will be responsible for updating ILS associated with the FC and completing FCIP 110/130 forms for submittal to the FCIP manager at NAVELEXENGCEN San Diego for entry into the FCIP data base.

c. Fleet Ship/Shore Personnel Installations. Field changes designated as Type II, Class A, may be installed by fleet ship/shore (organizational) personnel. These FCs will be published in an EIB. It should be noted that fleet ship/shore activities installing this type of FC are not required to follow the normal FCIP procedures, except for 3-M accomplishment reporting.

d. Naval Industrial Activities. Navy industrial activities may be designated as the installing activity of a FC if the installation requires industrial capability. These FCs will normally be installed during ship overhaul or when equipment is removed to a depot for overhaul. The PMW is responsible for supplying kits and funding installation. SPAWAR 003 is responsible for scheduling FC installations performed by Naval industrial activities, and ensuring that accomplishment is reported in accordance with 3-M procedures and that the FCIP Form 110 is completed and forwarded to the FCIP Manager at NAVELEXENGCEN San Diego for entry into the FCIP data base.

5.12.3.2 Field Change Installation Program Planning

5.12.3.2.1 Field Change Installation Program Planning Procedures. The purpose of the following paragraphs is to describe the managerial and operational functions of the FCIP. It is intended to provide guidance to FCIP personnel in the preparation of the planning, performance and documentation of these functions.

5.12.3.2.2 Scheduling. The FCIP East and West Coast facilities will establish and implement schedules for FCIP team visits to ship and shore activities. The frequency of visits will be determined by availability of funds, ships' operating schedules, need determined by Fleet and shore activity Commanders, and availability of material. Schedules will be coordinated through

the chain of command as required by fleet/shore activity policies and directives. Two types of schedules will be maintained:

a. Full FCIP visit by FCIP teams. During full FCIP visits, the team will validate all FCs to verify accuracy of data in the FC tracking system, and review all FC related ILS. At the same time, all outstanding FCs will be installed, provided material is available and industrial support is not required.

b. Special FCIP FC installation schedules. These schedules are for special FCIP installation teams or AITs established by PMWs to install FCs that are categorized as priority in nature, i.e., emergency or urgent.

5.12.3.2.3 Priority Field Change Installation. It must be noted that FCIP planning and scheduling may be impacted by circumstances which require the issue and installation of specified FCs on an urgent or emergency basis.

A priority FC is a change that:

a. Emergency

(1) Effects a change in operational characteristics which if not accomplished without delay, may seriously compromise the national security.

(2) Corrects a hazardous condition which may result in fatal or serious injury to personnel, extensive damage, or destruction of equipment.

b. Urgent

(1) Effects a change in operational characteristics which if not accomplished expeditiously, may seriously compromise the mission effectiveness of deployed equipment.

(2) Corrects a potentially hazardous condition which may result in serious injury to personnel or in damage to equipment. A potentially hazardous condition compromises safety and embodies risk but within reasonable limits, and permits continued use of the affected equipment, provided the operator has been informed of the hazard and appropriate precautions have been defined and distributed to the user.

(3) Meets significant contractual requirements, e.g., when lead time will necessitate slipping approved production, activation, or construction schedules, if the changes are not incorporated.

(4) Effects an interface change which if delayed, will cause a schedule slippage or increased cost.

(5) To effect through value engineering or other cost reduction efforts, net life cycle savings to the Government of more than one hundred thousand dollars, when expedited processing of the change will be a major factor in realizing lower costs.

5.12.3.2.4 Routine Field Change Installation. Prior to the start of the budget call for the next fiscal year, the FCIP East and West Coast Area Managers will obtain copies of the updated ship/shore files from the FCIP data base. The Area Managers will use the information from these files and related data to develop long range plans and forecast budget requirements. The budget request is coordinated and forwarded by NAVELEXENGCEN San Diego to the program sponsor, SPAWAR 003, for submission to the funding source.

Upon receipt of funding, the Area Managers compare allocated funds with their requirements forecast and develop the short range plans to cover FCIP operations in the forthcoming fiscal year. Essential to the short range plan is the preparation of a list of candidate ship/shore activities for participation in the FCIP. The list of ships is presented to the cognizant Force Commanders, and representatives of the MSC and U.S. Coast Guard, who review the list and establish priority listings for visits by the FCIP installation teams to their ships or activities. Normally, the Area Manager receives a preferred priority and an alternate priority listing from the Force Commanders and their counterparts in the MSC and U.S. Coast Guard. As a precautionary effort, a back-up list may also be provided. At this time, the Area Managers request and receive authority for direct liaison with the candidate ships and their Unit and Group Commanders. The Area Managers review ships' operational schedules, ships' present listings and other relevant data, and establish liaison with representatives of the ships and activities to schedule visits by the FCIP installation validation/verification teams.

5.13.3.2.5 Field Change Installation Program Validation Aids. Prior to installing the FC, the FCIP team or other designated installing activity will be required to obtain from the FCIP Data Base all necessary FCIP forms to be completed during installation. The data base provides FCIP management with a viable source of the FCIP related information required for the efficient operation of the project.

For AITs designated by PMWs to install FCs, the FCIP 110 and FCIP 130 forms can be obtained from the NAVELEXENGCEN San Diego FCIP Manager. Use of these forms is mandatory for all FCs in-

stalled by FCIP teams, AITs and industrial activities authorized to install FCs. The forms are to be completed and forwarded to the FCIP Program Manager at NAVELEXENGCEN San Diego for entry into the FCIP data base.

The following is information regarding various FCIP forms and reports:

a. FCIP 110 - FCIP Equipment Verification/Field Change Status Record. This record is prepared for each equipment by ship and is used as a work sheet during the team visit to record and report the FC status of all SPAWAR cognizant equipment installed aboard ship. See Appendix G.

b. FCIP 130 - FCIP Technical Documentation Work Sheet. This form lists the technical documentation for the equipment listed on the FCIP 110. See Appendix G.

c. FCIP 160 - Report of Field Change Installation (Used only by FCIP). This report is prepared for an individual ship. It provides an updated status of the FCs for all SPAWAR cognizant equipment on board. It becomes part of the Shipboard Activity Report (SAR). See Appendix I.

d. FCIP 170 - Report of Technical Document Status (used only by FCIP). This report lists all the technical documentation and changes applicable to the equipment listed in the FCIP 160. It is also part of the SAR. See Appendix I.

e. FCIP 100 - This report is a SPAWAR cognizant master listing and lists all SPAWAR Cognizant equipment with FCs. It is a source document for the FCIP data base. See Appendix G.

f. FCIP 150 - Lists all technical documentation for SPAWAR Cognizant equipment listed in FCIP 100 and is also a source document for the FCIP data base. See Appendix I.

5.12.3.3 <u>Field Change Installation Program Installation Procedures</u>. These procedures are to be followed by the FCIP, PMW AITs, and industrial activities designated to install FCs.

5.12.3.3.1 <u>Pre/Post Installation Testing</u>. The FCIP installation/verification team visit begins with a review of all SPAWAR cognizant equipment on board. Using the Ships Equipment Configuration Accounting System (SECAS) Key Field Change Check Points document for guidance, the FCIP team physically examines each equipment to determine its actual FC configuration status. This status is recorded on the Equipment Verification/Field Change Status Record Sheet, FCIP Form 110. The FCIP Form 100 is a one-sheet document used as a worksheet during the team's visit; it

lists the current status of the SPAWAR cognizant equipment and all FCs installed by the team during the visit. Each sheet covers the FCs for one equipment; it contains the equipment designation, Equipment Identification Code (EIC), serial number, location of the equipment on the ship, contract number, Contractor and Government Entity (CAGE) Code, SECAS identification number and the total manhours expended on the equipment during the visit.

Space is also provided on the FCIP Form 110 to record other pre-installation and post-installation data and relevant equipment information. During the configuration status review, the team identifies and reports the presence of FCs found aboard the ship or activity which have not yet been installed.

5.12.3.3.2 Shipboard Installation of Field Changes. The FCIP team performs an operational test on each SPAWAR cognizant equipment on which FCs will be installed. The test is performed in accordance with the Planned Maintenance Sub-System procedures for the equipment involved. The pre-installation tests are performed and clearly documented in the presence of responsible shipboard personnel. The status of the pre-installation testing is recorded on the FCIP Form 110 and authenticated by the signature of the ship's representative who witnessed the testing. The ship's representative shall be at least a work center supervisor.

Upon successful completion of operational testing of the equipment, the FCIP team performs the installation of all field changes scheduled for that visit. The FCs are installed in accordance with procedures specified in instructions provided with the FC or FCB, whichever is applicable. When the installation is completed, FCIP team personnel again conduct an operational test of the equipment to demonstrate satisfactory performance. PMS procedures are again used in the testing, but only to the extent that they are compatible with the new equipment configuration. The testing is witnessed by ship's force personnel and test status acknowledged through signature on the FCIP Form 110.

The FCIP team shall not install FCs on inoperative equipment unless permission is granted by competent authority (work center supervisor or senior) aboard the ship or activity. This event is also recorded on the FCIP Form 110 over the signature of the person authorizing the action. Post-installation testing is waived in such cases. When the installation task is completed, FCIP team personnel complete the Field Change Decal (Form No. 0264-LP-085-0000) and affix it to the front panel of the equipment. Team personnel also complete the required 3-M data sheets and provide them to the ship or activity for submission into the 3-M system and to update the ship or activity's Consolidated Ships Maintenance Plan (CSMP). Disposition of the reports is the responsibility of the ship or activity. OPNAV 4790/CK, shown in

Appendix H, is prepared for completed FCs. If for some reason an applicable FC is deferred, the team completes OPNAV 4790/2K. An example of this form is shown in Appendix H.

5.12.3.3.3 Priority Field Change Installation. A priority FC shall be accomplished by either a special FCIP team, fleet personnel, or industrial activities/maintenance support contractors if qualified.

a. Special FCIP Team - Once a special FCIP team has been assigned to accomplish the FC, the Fleet Command shall establish a priority list of installation sites and schedule a ship visit for the Special FCIP team. The team shall complete the FC installation and documentation as in a routine FC.

b. Ships Force - Once the FCB for a priority FC has been received by the Ships Force, installation may be accomplished. Field Change Decal and mounting must be completed after installation. Reporting will be accomplished in accordance with 3-M reporting requirements.

c. Industrial Activities FC Process. If the FC requires installation by other industrial activities/maintenance support contractors, the FC process may vary.

(1) Naval Shipyards or SUPSHIPS - Naval Shipyards or SUPSHIPS installing FCs will follow their established standard operating procedures. Upon completion of a FC, SUPSHIPS or Naval Shipyards will notify the FCIP.

(2) Other - Any other activity other than Naval Shipyards or SUPSHIPS installing FCs shall develop long range plans/schedules for submission to the FCIP Area Manager, NAVELEXENGCEN San Diego, for approval prior to installation. Routine FCIP FC procedures shall then be applicable to these activities.

5.12.3.4 Field Change Reporting

5.12.3.4.1 Processing Shipboard Review and Updating of Logistics Support Documentation. Concurrent with the tasks involving the field change status review and the field change installation, the FCIP conducts a survey of the ship or activity's logistics support documentation for all SPAWAR cognizant equipment for which FCs have been installed. Primarily, these documents are:

a. PMS

(1) Maintenance Index Pages (MIPs)
(2) Maintenance Requirements Cards (MRCs)

b. Technical Support Manuals for each equipment

c. APLs

The FCIP reviews the ship or activity's PMS documentation for SPAWAR cognizant equipment. This review is not intended to supplant or supersede the regularly scheduled PMS inspections, but is performed to ensure that the maintenance actions specified in the MIPs and MRCs are adequate to support the equipment in its FC configuration. Deficiencies are documented and reported in the SAR which is completed subsequent to the FCIP team visit. (See Appendix I.)

The FCIP team determines whether or not there is a sufficient number of technical support manuals for each SPAWAR cognizant equipment. One copy of the manuals for each equipment kept in the ship or activity's technical library, electronics material office and equipment space is considered adequate. Each manual is inspected for compatibility with the current configuration status of the equipment. The status of each manual is recorded in the Technical Documentation Worksheet (FCIP Form 130, Appendix G). Technical support documents are upgraded by inserting required change pages and/or making appropriate "pen and ink" corrections. Changes installed by the FCIP, as well as changes still required are also recorded on FCIP Form 130. FCIP Form 130 is then recorded on FCIP Form 170.

During the visit, the FCIP team reviews the ship or activity's file of APLs for all SPAWAR cognizant equipment. Both Sections A and B of each APL are reviewed to ensure that adequate support is provided for the equipment in the current configuration, including those changes made by the team during the visit. This is necessary since many FCs require the installation of new components such as resistors, capacitors, relays, switches, integrated circuits and similar items which are subject to failure.

5.12.3.4.2 <u>Field Change Installation Program Shipboard Activity Report</u>. Upon completion of a visit to a ship or activity, the FCIP team reviews the data compiled during the evolution and prepares a SAR. This report is prepared in accordance with the format and instructions specified by the FCIP management, and generally describes the work performed by the team during the visit. The report contains recommendations describing the actions which will be taken by ship's force to correct deficiencies discovered during the FCIP team visit which are not within the scope of the FCIP team's effort. The report also contains two tables which detail the status of FCs for SPAWAR:

a. The FCIP Report of Field Change Installation (FCIP Form 160).

b. The FCIP Report of Technical Document Status (FCIP Form 170).

A summary of the completion instructions and a sample SAR are included in Appendix I of this Manual.

5.12.3.4.2.1 Shipboard Activity Report Distribution. Copies of the completed SAR are distributed as follows:

a. One copy is provided for each cognizant ship or activity and its squadron, group and force Commanders, Engineering Repair Alteration Activity, Cruisers and Destroyers Group (PERACRUDES) Philadelphia, and the SUPSHIPS, Pascagoula, Mississippi.

b. For Coast Guard units, a copy is sent to each of the following: the cognizant ship, the Commanding Officer, U.S. Coast Guard Supply Center, Code 300.2, and the Commander of the applicable Coast Guard district; a completed U.S. Coast Guard material, maintenance management report is sent to the Commandant, U.S. Coast Guard, Code G-TSE-2 in lieu of a complete SAR. Additionally, copies are to be sent to the cognizant planning yard and cognizant Ship Logistics Manager (SLM) at NAVSEASYSCOM, Washington, D.C.

c. Copies of SARs involving special projects shall also be sent to the cognizant equipment or systems manager (PD/PMW).

5.12.3.4.3 3-M Reporting. It is mandatory for all activities installing FCs to fulfill 3-M reporting requirements. For the purpose of this Manual, this section will provide instructions for 3-M reporting and the procedures to complete OPNAV 4790/CK and 4790/2K Forms. (See Appendix H.) Other maintenance forms and their applicability are found in OPNAVINST 4790.4.

a. Applicability

(1) The OPNAV 4790/CK Form shall be used to report any maintenance action which results in a configuration change, such as:

(a) Partially completed maintenance actions.

(b) Completed maintenance actions.

(2) The OPNAV 4790/2K Form shall be used to report any of the following:

(a) Deferred maintenance actions.

(b) Completed maintenance actions which do not result in configuration changes (including those previously deferred).

NOTE: For further instructions on how to complete the OPNAV 4790/CK and OPNAV 4790/2K Forms, refer to OPNAVINST 4790.4.

b. Submission of OPNAV 4790/CK and 4790/2K Forms - The maintainer completes the number of OPNAV 4790/CK or 4790/2K Forms or continuation pages (original and three copies of each) necessary to identify each of the components for which a configuration change occurred as a result of accomplishing a maintenance action. The completed forms are submitted to the work center supervisor and then to the division officer, each of whom reviews the forms for completeness and accuracy and initials in the appropriate block at the bottom of each form. The division officer then forwards all copies of the forms to the Supply Department. The Supply Department personnel shall:

(1) Verify/enter the Allowance Parts List/Allowance Equipage List (APL/AEL) number and the Service Application Code (SAC) of the component.

(2) Verify the Record Identification Number (RIN) for each component. Discrepancies between the information in the reports and the information on the forms will be resolved with the work center supervisor prior to further routing. (Routing is the responsibility of each ship or activity. It may be desired that the Department Head or others review the OPNAV 4790/CK or 4790/2K Forms.)

(3) Initial the appropriate block at the bottom of each form, retain the second copy of each OPNAV 4790/CK or 4790/2K Form, and then fill in the ship sequence number at the bottom of the page.

(4) Ensure that the work center entered is the work center having primary maintenance responsibility for the equipment, then forward the original, the first copy, and the third copy to the 3M System Coordinator. After reviewing for completeness, initialing and dating in the appropriate block, the 3-M System Coordinator submits the original OPNAV 4790/CK or 4790/2K Form to the appropriate NAVSEACEN and the first copy to the 3-M automated data processing facility serving the activity. The third copy is to be maintained by the work center as a suspense copy. All copies shall be checked for readability. The 3-M Systems Coordinator shall ensure that all pages of the forms applicable to a

single maintenance action are properly sequenced and batched for further processing. The automated data processing facility shall process the forms according to standard 3-M procedures.

NOTE:

(1) Depending on the circumstances surrounding the accomplishment of the FC, the installing activity may be required to use different procedures to complete these forms. OPNAVINST 4790.4 shall be referenced if these circumstances exist.

(2) Some U.S. Navy Ships operate the Shipboard Non-Tactical ADP Program (SNAP) II system. Therefore, use of the SNAP input form in lieu of the OPNAV 4790/CK is permitted.

5.12.3.4.4 Field Change Status Reporting. Utilizing information contained in the FCIP Data Base, SPAWAR 003 will compile quarterly FC status reports for each PD. These reports will contain the equipment nomenclature, serial number location, and FC status. As required, or when requested, SPAWAR 003 will provide these reports to PMWs for selected equipments and FCs.

5.12.4 Production Change Accomplishment. Production changes, when approved by the CCB PD, will be accomplished by the contractor. Accomplishment reporting, by serial number, will be via status accounting data, as contractually required by the Government.

6.0 CONFIGURATION STATUS ACCOUNTING

6.1 General. Configuration Status Accounting (CSA) provides documentation which defines the CI and CSCI so that the CI/CSCI may be developed, tested, evaluated, constructed/manufactured, delivered, operated, maintained, supported and traced to established baselines. This includes the recording and reporting of the information that is needed for effective configuration management, including a listing of the approved configuration identification, the status of proposed changes to configuration baselines, and the implementation status of approved changes. This listing is known as a configuration record, but for SPAWAR purposes, a Configuration Item Index (CII) will be initiated and maintained for each baselined CI/CSCI.

The CSA function of CM provides traceability of changes to configuration baselines and is an operational tool for accomplishment of all related tasks required for the management, acquisition, tests, operations, and ILS of the CI/CSCI.

6.2 Objective. The objective of SPAWAR CSA is to maintain an accurate and timely record of each CI/CSCI established as a product of the configuration identification process to:

a. Combine present efforts and existing systems to centralize and standardize CSA practices for all CI/CSCIs under development or being acquired by SPAWAR and its activities;

b. Assist in the management of the acquisition process, including design development, technical reviews, configuration audits, test and evaluation, production, and planned ILS;

c. Provide the basis by which accurate ILS is obtained for operational and support activities;

d. Provide data on proposed and implemented changes; and,

e. Update the current configuration identification of the CI/CSCI for follow-on acquisition and competitive reprocurement of spare and repair parts.

6.3 Responsibilities

6.3.1 Program Director/Program Manager Warfare Configuration Status Accounting Responsibilities. The following responsibilities are designed to assist the PD/PMW in understanding his role in fulfilling SPAWAR policy requirements. The PD/PMW is responsible for:

a. Ensuring that the CSA data necessary to manage configuration identification effectively and economically is reported, recorded and managed during the acquisition phases, and that the CSA system used during the development of the CI/CSCI will be progressively integrated with the standard SPAWAR CSA system when the development of the CI/CSCI reaches a point where ILS planning is effected, during the Production and Deployment phase, and throughout the remainder of the CI/CSCI's life cycle.

b. Selecting specific data elements, choice of report and record formats (in general accordance with MIL-STD-482 and DOD-STD-2167), and actual record keeping requirements.

c. Employing CSA consistent with the mutual CM agreements established, when participating in joint programs.

d. Initiating a CII record for each CI/CSCI when the appropriate configuration baselines are established. The documents and data contained in this record shall be maintained in a manner that provides the continued visibility required to effectively manage and give traceability to the configuration baselines.

e. Ensuring timely updates and completeness of each document identified in the CII, making them consistent with CSA data requirements.

f. Coordinating with SPAWAR 003 to determine data requirements and inputs for all CI/CSCIs upon completion of the FSD and, if applicable, Low-Rate Initial Production Phase. When the product baseline has been established, required data will be integrated with the SPAWAR CSA system.

6.3.2 <u>SPAWAR 003 Configuration Status Accounting Responsibilities.</u> In conjunction with the PD/PMW's CSA responsibilities, SPAWAR 003 will assist the PD/PMW in fulfilling these requirements through responsibility for:

a. Designing, establishing, maintaining, and monitoring an overall SPAWAR CSA system for hardware/software located in the fleet and at shore activities, and providing timely and current information to the PD/PMW and user activities as to status.

b. Specifying for the SPAWAR CSA system data program requirements as to level of detail, form, format, frequency of publication, and distribution; and ensuring standard forms, reports and automated, digitized on-line systems are utilized.

c. Ensuring data inputted from reporting sources use quality assured data and standard data elements and are accumulated in structured records for CSA processing.

d. Ensuring data maintained is systematically integrated with the Navy central configuration data files, i.e., the WSF at SPCC, Mechanicsburg, PA.

e. Providing guidance for and ensuring that PD/PMWs acquire CSA data in the proper format from development contractors and SPAWAR activities.

6.4 Implementation. CSA data will be tailored and documented in a structure and format consistent with the applicable MIL-STDs, ADP documentation instructions, and as prescribed in this manual. In the fulfillment of status accounting responsibilities, the SPAWAR Configuration Information Management System (SCIMS), being developed by SPAWAR 003, will be utilized to record baseline data and provide traceability of all alterations to hardware/software.

6.4.1 SPAWAR Configuration Information Management System. The purpose of SCIMS is to develop, procure, install, and operate a Command level status accounting system which integrates existing data and provides a centralized source of Command level information. The SCIMS will record and report information needed for effective CM of SPAWAR CI/CSCIs and will include a listing of the approved configuration identification, the status of approved changes, and the implementation status of approved changes. The data base for SCIMS is being developed in two phases at the TDC, NAVELEXENGCEN Portsmouth, VA, with SPAWAR 003 providing system management. The SCIMS will:

a. Provide consistent baseline and status information throughout SPAWAR,

b. Develop a standard process for inputting baseline and status information,

c. Standardize outputs,

d. Improve reliability of data, and

e. Provide immediate access to baseline and CSA information.

6.4.2 SPAWAR Configuration Information Management System Phase I. Phase I, Data Base Access and Design/Development, is currently in process and relates to:

a. Specifying and designing of the system requirements,

b. Defining the organizational and preliminary "set-up" structure of the SPAWAR data base,

c. Completing the hardware data base for 2Z, 7G, 4M, and 6K and identifying the data base as SCIMS Phase I,

d. Initiating the expansion of the hardware data base by providing currently available logistics and field change data,

e. Defining ECP, FCIP, SCLSIS, and WSF system interfaces, and

f. Providing SPAWAR 003, PD/PMWs and support activities access to currently available hardware data base.

6.4.2.1 Phase I Development. The Hardware Data Base, ECP Tracking System, and the FCIP Data Base represent the initial developmental efforts for the SPAWAR SCIMS.

a. Hardware Data Base. This data base, developed by the TDC, NAVELEXENGCEN, Portsmouth, VA, is a complete listing of all SPAWAR cognizant hardware, broken out by the following supply categories: 2Z, 7G, 4M, and 6K. It is the responsibility of the TDC to maintain the data base with current, accurate information.

b. ECP Tracking System. The ECP Tracking System, under development, will allow the Command to track Class I ECPs and critical/major Deviations and Waivers from initiation to implementation, and will be an integral interface to the SCIMS. Headquarter user access will be available through direct terminal link dial-up modem connections, or a high-speed dedicated data line. The system will be developed as a management tool enabling the PD/PMWs to receive, track and process proposed changes submitted by contractors and SPAWAR activities. In addition, the system will enable SPAWAR 003 to monitor the change process for compliance to SPAWAR policy and procedures, and to maintain and manage the Command-wide application of the system. The automated system will track upcoming or overdue events at various stages of change processing and automatically generate reports relative to those events.

c. FCIP Data Base. The FCIP data base contains data related directly to the incorporation of specific FCs into SPAWAR cognizant equipments/systems on each ship or shore activity. A FC is a method by which an approved Class I ECP is accomplished on deployed electronics hardware. The FCIP task is to install FCs, update applicable logistics documentation, report accomplishment, update the FCIP Data Base, and produce a Shipboard/SAR. The data base provides SPAWAR with an accountability, by serial number, of installed FCs and provides information regarding updated ILS documentation. In addition, the data gathered by the FCIP provides planning and projection information for SPAWAR 003 and the NAVELEX-ENGCENs at San Diego and Charleston. Selected FCIP data will be

submitted to the NAVSEA SCLSIS, via the SPAWAR SCIMS, for input into the WSF and for use by the SCLSIS Planning Yards. Headquarters access to the FCIP data base is currently available through SPAWAR 003.

6.4.3 SPAWAR Configuration Information Management System Phase II. Phase II, Enhanced Design/Deployment and Full Scale Operations, involves:

a. Establishment of all required system interfaces,

b. Enhancement of the initial SCIMS data base,

c. Detailing of the Command-wide SCIMS responsibilities, and

d. Providing SCIMS access to all Headquarters and support activity users.

6.5 Configuration Status Accounting/SPAWAR Configuration Information Management System. The essential concept of CM is the dependency of the sub-disciplines on each other, i.e., identification, control, reviews/audits, and status accounting. CSA is the means by which the outputs of the other disciplines are recorded, stored, and reported, thus controlling the integrity of the individual CI/CSCIs. The SCIMS, as an information storage and exchange system, can only be as effective as the quality of the data resulting from the identification and control processes. This requires that accurate and current baseline data be recorded and that every authorized change be reported promptly and completely.

THIS PAGE INTENTIONALLY LEFT BLANK

APPENDIX A

REFERENCE DOCUMENTS

DOD STANDARDS

DoD-STD-100 "Engineering Drawing Practices". This standard prescribes general requirements for the preparation and revision of engineering drawings and associated lists prepared by or for the Departments and Agencies of the Department of Defense to the extent specified in DoD-D-1000.

DoD-STD-480 "Configuration Control-Engineering Changes, Deviations and Waivers". This standard delineates configuration control requirements and provides instructions for preparing and submitting proposed engineering changes and related information. DoD-STD-480 provides requirements for maintaining configuration control of Configuration Items, requirements for preparation and submission of proposed engineering changes, deviations, waivers, and Notices of Revision (NORs). Additionally, it provides supporting information (logistic, fiscal, technical) to define the impact of a proposed engineering change, and instructions for submitting the information necessary to maintain the configuration identification in a current status.

DoD-STD-2167 "Defense System Software Development". This standard contains requirements for the development of Mission-Critical Computer software. It established a uniform software development process which is applicable throughout the system life cycle.

DoD DIRECTIVES/INSTRUCTIONS

DoD-D-4130.2 "The Federal Catalog System Policy Manual". This Department of Defense Directive contains the policy and procedures for the Federal Cataloging System.

DoD-D-5000.1 "Major and Non-Major Defense Acquisition Programs". This Directive and DoD Instruction 5000.2 are first and second, respectively, in order of precedence for providing policies and procedures and managing major and non-major defense acquisition programs, except when statutory requirements override. The policies, principles, and objectives of these issuances shall also be applied to non-major defense acquisition programs.

DoD-I-5000.2 "Defense Acquisition Program Procedures". This Instruction sets forth uniform procedures governing major defense acquisition programs and establishes specific requirements and responsibilities for acquiring major defense acquisition programs requiring decision authority by the Secretary of Defense and Defense Acquisition Board (DAB) programs.

DoDD-5010.19 "Configuration Management". This directive redefines the policies for configuration management material including system equipment, computer programs, facilities and other designated items.

MILITARY STANDARDS

MIL-STD-130 "Identification Marking of U.S. Military Property". This standard establishes the item marking requirements for identification purposes as required in stocking and replacing parts, subassemblies, assemblies, units, sets and all other items of military property required by the DoD, with recognition of certain delimitations.

MIL-STD-196 "Joint Electronics Type Designation System". This standard establishes procedures within the DoD for standardization of identification for design control of electronic material and associated equipment (type designation), excluding Communications Security (COMSEC) material.

MIL-STD-280 "Definitions of Items Levels, Item Exchangeability, Models and Related Terms". The purpose of this standard is to establish terms and definitions to be used in describing the levels of military items and to designate and define item exchangeability, models, and other related terms. These terms apply to electrical, electronic, mechanical, pneumatic and hydraulic military equipment.

MIL-STD-481 "Configuration Control-Engineering Changes, Deviations and Waivers (Short Form)". This standard prescribes procedures and format authorized for preparing an abbreviated ECP.

MIL-STD-482 "Configuration Status Accounting Data Elements And Related Features". This standard establishes the data elements, and their related data items, codes, use identifiers, and data chains (referred to as "related features") to be used as the content of configuration status accounting records. This standard does not prescribe which of the data elements and related features to use, the status-accounting-record format to be used, or the frequency of status-accounting-record reports. Such requirements are specified elsewhere by the procuring activity.

MIL-STD-490 "Specification Practices". This standard sets forth practices for preparing, interpreting, changing and revising peculiar program specifications prepared by or for DoD components. It establishes uniform specifications practices comparable to the engineering drawings practices of DoD-STD-100.

MIL-STD-961 "Military Specification and Associated Documents Preparation of". This standard establishes the formats, contents, and procedures for military specifications and associated documents.

MIL-STD-962 " ". This standard establishes engineering and technical requirements for processes, procedures, practices, and methods that have been adopted as standard.

MIL-STD-1168 "Ammunition Lot Numbering". This standard establishes and describes the lot numbering system that shall be used to identify items of ammunition and explosive material, to include air frame items such as fins, during all phases of their life cycle.

MIL-STD-1456 "Contractor Configuration Management Plans". This standard establishes the format and contents of configuration management plans prepared by contractors.

MIL-STD-1521 "Technical Reviews and Audits for Systems, Equipments, and Computer Software". This standard establishes the requirements for the conduct of technical reviews and audits on systems, equipments, and computer software.

MILITARY SPECIFICATIONS

DoD-D-1000 "Drawing Engineering And Associated Lists". This specification prescribes requirements for engineering drawings and associated lists acquired in support of DoD material. The requirements of this specification are applicable to engineering drawings and associated lists regardless of their preparation or system of measurement.

MIL-F-17655 "Field Changes and Field Change Kits; General Specification for". This specification covers the development and preparation of field changes and field change kits (for evaluation and production).

MIL-S-83490 "Specifications, Types and Forms". This specification establishes the general requirements for the preparation of specifications for the Departments and Agencies of the DoD.

OPNAV INSTRUCTIONS

OPNAVINST 4790.4 "Ships Maintenance and Material Management (3-M) Manual". The purpose of MDCS is to provide information about certain fleet maintenance and maintenance support actions for use by various levels and areas of management throughout the Navy, with particular emphasis on providing information at the shipboard level.

OPNAVINST 5200.28 "Life Cycle Management Mission Critical Computer Resources for Navy Systems Managed under the Research, Development and Acquisition Process". This instruction establishes the policies for acquisition management for mission critical computer resources.

SECNAV INSTRUCTIONS

SECNAVINST 4130.2 "Department of the Navy Configuration Management Policy". This instruction prescribes uniform requirements for the application and tailoring of Configuration Management for material items developed, produced, operated and supported by the Department of the Navy.

SECNAVINST 5000.1 "System Acquisition in the Department of the Navy". This instruction establishes policy and management principles for acquisition of systems within the Department of the Navy. This instruction implements DoD-D-5000.1, DoD-I-5000.2.

SPAWAR INSTRUCTIONS

SPAWARINST 4410.4 "Policy and Procedures for the Request and Assignment of Military Nonemclature, Serial Numbers and Review and Approval of Identification Plate Formats". This instruction updates policy and procedures for the processing of nomenclature requests, assigning serial numbers and reviewing and approving the format of identification plates for electronic equipment and accessories.

SPAWARINST 5200.23 "Computer Software Life Cycle Management Guide". The purpose of this instruction is to provide detailed information to SPAWAR Program Managers that will enable them to fully understand software development practices for a SPAWAR software system acquisition.

SPAWARINST 5600.6 "Engineering Change Bulletin (EIB) Guide for Preparation of Articles for The Public". The purpose of this instruction is to establish and promulgate revised guidelines for the preparation of articles for publiction in the Electronic Information Bulletin.

SPAWARINST 9000.1 "Warfare System Controlled Interface Drawings (WSCIDs) Policies and Procedures". The purpose of this instruction is to promulgate policies and procedures relative to the use of WSCIDs.

MISCELLANEOUS REFERENCES

"NATO Standardization Agreement 4159". This STANAG provides NATO configuration management policies and procedures and a list of definitions to be used in multinational joint projects or programs for the development, production, modification, operation, logistic support and procurement of defense material and its related documentation.

"EEOOO-NB-GYD-010/SPAWAR Engineering Drawings". The purpose of this handbook is to identify SPAWAR requirements for the procurement and detailed review of level II and level III drawings and is consistent with DoD-D-1000. These engineering drawings are used by SPAWAR for competitive reprocurement of equipment and spare parts and used for overhaul, field modifications and maintenance of equipment and system.

THIS PAGE INTENTIONALLY LEFT BLANK

APPENDIX B

DEFINITIONS

Acceptance. An official, documented act by the Government to accept transfer of accountability, title, and delivery of a contract item. Acceptance is signified by the execution of DD Form 250 for Contract End Item deliverables or a signed affidavit for lesser items.

Acceptance Test. The formal inspection, testing, and/or evaluation accomplished in accordance with contract requirements to verify the performance and adequacy of a Configuration Item at the time of its delivery to, and acceptance by, the Government.

Acquisition. The acquiring by contract of Configuration Items, configuration identification or services by and for the Government through purchase, lease or barter, whether they are already in existence or must be formulated, demonstrated, validated, developed, tested, evaluated or created. Acquisition begins at the point when the Government's needs are established and includes the description of requirements to satisfy those needs, solicitation and selection of sources, contract agreements, financing, performance and administration, and those technical and management functions directly related to the process of fulfilling the Government's needs by contract. Acquisition ends at that point when the contract requirements are satisfied, the contract deliverables are accepted by the Government and any warranties in effect have expired. For the purpose of Configuration Management, acquisition shall include planned modernization programs for Configuration Items in the operation and support phase.

Acquisition Cycle. That part of the life cycle of a Configuration Item for which acquisition is in process. The acquisition cycle is made up of a series of milestone decisions and acquisition phases.

a. Milestone 0 - Program Initiation/Mission Need Decision. Milestone 0 decision determines mission need and approves program initiation and authority to budget for a new major program. Normally, a Concept Exploration/Definition phase follows this approval.

b. Milestone I - Concept Demonstration/Validation Decision. Milestone I decision approves initiation of the Concept Demonstration/Validation phase, selection of program alternatives, performance/cost and schedule trade-offs, including the need for a new development program versus buying or adapting existing U.S. or Allied military or commercial systems.

c. Milestone II - Full Scale Development Decision. The Milestone II decision approves initiation of the FSD phase. As appropriate, Low-Rate Initial Production (LRIP) of selected components and quantities may be approved to verify production capability and to provide test resources needed to conduct interoperability, live fire, or operational testing.

d. Milestone III - Full Rate Production Decision. The Milestone III decision approves initiation of the full-rate production/development phase or construction. If the magnitude of the program is sufficiently large and/or the time between the beginning of low-rate initial production and full rate production is significantly long, there may be a need for a Program Review or a Milestone IIIA before the Milestone III decision point.

Acquisition Phase. The acquisition phase consists of the following.

a. Concept Demonstration/Validation Phase. This phase is the period when major system characteristics are reined through studies, system engineering, development of preliminary equipment and prototype computer software, and test and evaluation. The objectives are to validate the choice of alternatives and to provide the basis for determining whether or not to proceed into the next phase.

b. Concept Exploration/Definition Phase. That part of the acquisition/life-cycle when competitive alternative concepts are solicited, explored, and evaluated. During this phase, CM plans are initially formulated and the Functional Baseline is established by acceptance of the functional configuration identification as a product of the Functional Requirements Review.

c. Full Scale Development and Low Rate Initial Production Phase. That part of an item's life cycle when competitive alternative concepts are fully developed and made ready for production. During this phase, Configuration Management plans are revised, the functional and allocated baselines are updated, and the product baseline is established as a product of the Production Readiness Review. As appropriate, LRIP of selected components and quantities may be approved to verify production capability and to provide test resources needed to conduct interoperability, live fire, or operational testing.

d. Full Rate Production and Initial Deployment Phase. That part of an item's life cycle when it is produced and deployed. During this phase, Configuration Management plans are revised, the functional, allocated and product baselines are updated, and the configuration record is coordinated with the operating and support activities. Also, during the deployment portion of this

phase the item will be transferred from the acquisition phase to the Operating and Support phase of its life cycle.

e. Operation and Support Phase. ,That portion of the life cycle of a Configuration Item that follows the acquisition cycle and continues until disposal of the item. The Operations and Support phase includes the use of the CI by the operating (active and reserve) forces of the DoD components, integrated logistic support, any modernization programs, inactive storage or maintenance, and disposal.

Allocated Baseline. See Configuration Baseline.

Allocated Configuration Identification. See Configuration Identification.

Allocated Requirements Review. During the ARR each preliminary ACI is developed, documented and reviewed during the demonstration and validation phase. The ARR evaluates the optimization, correlation, completeness, and risks associated with the preliminary ACI.

Alteration. Any modification made to an equipment after delivery to the Government. The term alteration applies to a hardware only or a hardware/software change.

Alteration Installation Team. A team that will utilize the same procedures as the FCIP team in terms of performing pre- and post-installation testing, installing FCs in accordance with the FCB, and reporting installation in accordance with the 3-M manual. AITs will also be responsible for updating ILS associated with the FC and completion of FCIP Forms 110/130.

Application. The process of reviewing and selecting from available specifications, standards and related documents that apply to a particular material acquisition and contractually invoking them wholly, or in part, at the most advantageous time in the life cycle.

Approval. Authority to proceed.

Assembly. See Item Level.

Audit. See Configuration Audit.

Baseline. See Configuration Baseline.

Certification. Written authorization (Certification Form, Figure 5-4) granted prior to FC installation, ensuring that FCs are prepared for installation and can be logistically supported.

Class I Engineering Change Proposal. An Engineering Change Proposal that affects the current configuration identification or contract provisions. Once the product baseline is established, any change to the Configuration Item which impacts life-cycle costs, acceptance test criteria, operations, performance, or integrated logistics support. Also, see DoD-STD-480 for further detailed definition.

Class II Engineering Change Proposal. An Engineering Change Proposal which does not affect any one of the Class I criteria and normally documents typos/misspellings, clarifying notices or views, resolution of ambiguities, or computer program adaptation data or recompilation of codes within specified limits. Also, see DoD-STD-480 for further detailed definition.

Commercial Item. The term includes both supplies and services, of a class or kind which (a) is used regularly for other than Government purposes and (b) is sold or traded in the course of conducting normal business operations.

Computer Firmware. See Firmware.

Computer Program. A series of instructions or statements in a form acceptable to computer equipment, designed to cause the execution of an operation or series of operations. Computer programs may be either machine dependent or machine independent, and may be general purpose in nature or be designed to satisfy the requirements of a specialized process of a particular application. The form of a computer program may be a punched deck of cards, magnetic or paper tapes, discs, firmware, or other physical medium. A computer program is a Computer Software Configuration Item (CSCI) when it satisfies an end use function and is designated by the Government for CM. It may vary widely in complexity, size and type from a special purpose diagnostic program to a large command and control program, and will represent a requirement or set of requirements allocated from the functional or allocated baseline(s).

Computer Resources. The totality of computer hardware, computer software, data, and associated documentation, personnel, facilities and supplies.

Computer Resources Integrated Support Document. The CRISD defines the information that is required to perform life-cycle support of the contractually delivered software. Reviewed at the PDR, CDR and TRR.

Computer Software. A combination of associated computer programs and data required to enable the computer hardware to perform computational or control functions.

Computer Software Configuration Item. See Configuration Item.

Computer System Diagnostic Manual. The CSDM defines the information and procedures necessary to identify a malfunction and instructions to run the diagnostics. The CSOM is reviewed at the PDR, CDR, TRR, FCA, and PCA.

Computer System Operator's Manual. The CSOM defines the procedures and information necessary to operate the computer system in which the CSCI is executed. The CSOM is reviewed at the PDR, CDR, TRR, FCA, and PCA.

Configuration. The functional and/or physical characteristics of hardware/software as set forth in technical documentation and achieved in a product.

Configuration Audit. The Government conducted verification of an item for compliance with the contract requirements and for consistency with the item's current configuration identification. Also included, the Government's check of the effectiveness of the configuration control and status accounting functions. The acceptance of the following distinct Configuration Audits constitutes a correlated prerequisite to establishing the product baseline of the item:

a. Functional Configuration Audit. The Government's formal examination of test data prior to acceptance of the data and the item. It is conducted to determine the item's functional characteristics and to verify that the item has achieved the performance specified in the current functional and allocated configuration identification. It is a correlated prerequisite to the completion of the Physical Configuration Audit.

b. Physical Configuration Audit. The Government's formal examination of the "as-built" configuration of an item compared to its conditionally approved, preliminary, or current product configuration identification.

c. Follow-on Configuration Audit. Any configuration audit which may be conducted after completion and acceptance of the physical and functional configuration audits. These audits may be conducted during Production and Deployment phase Contracts which have long production runs, large numbers of items produced, second source manufactures, major configuration changes, or a need for high (or higher) levels of quality assurance. They may also be conducted during the Operations and Support phase in support of various operations and support managers.

Configuration Baseline. A configuration identification document or a set of such documents formally designated by the Government and fixed at a specific time during the acquisition cycle of an item. The baselines, plus approved changes from those baselines, constitute the current configuration identification. There are three distinct configuration baselines; once established, they are maintained and controlled throughout the life cycle of the item as the following separate baselines:

a. Functional Baseline (FBL). The formally designated functional configuration identification fixed as a product of the initial or Concept Exploration/Definition phase of the acquisition cycle. The software FBL is defined by the SSS.

b. Allocated Baseline (ABL). The formally designated allocated configuration identification fixed as a product of the Concept Demonstration and Validation phase (or equivalent) of the acquisition cycle. The software ABL is defined by the SRS, IRS, and OSD.

c. Product Baseline (PBL). This baseline is different than the other configuration baselines in that it may be established:

(1) As a result of incremental completion of the Configuration Audits, during the Full Scale Development and Low Rate Initial Production phase.

(2) Late, due to an extensive test and evaluation program coupled with an operational need to start the Production and Deployment phase prior to completion of the Configuration Audits.

(3) As a result of the completion of the configuration audits as single events and a final product of the Full Scale Development and Low Rate Initial Production phases.

Under the first condition, a conditionally approved product baseline may be established; under the second, a preliminary product baseline may be established. Under the third condition or, following the first two, when all of the requirements for the acceptance of the Configuration Audits have been met, the final product baseline may be established. The conditionally approved and preliminary product baselines (if used) and the final product baseline are the formally designated product configuration identifications, fixed upon the successful completion of the Configuration Audits -- normally as products of the Full Scale Development and Low Rate Initial phases of the acquisition cycle. The software PBL is defined by the SPS and VDD.

Configuration Change. A general term which signifies that the configuration of an item has been, or will be, changed through the configuration control process. It is the product of an approved Engineering Change Proposal or request for deviation or waiver that affects the configuration of an item.

Configuration Control. The systematic justification, preparation, submission, coordination, evaluation, approval or disapproval, and implementation of a configuration change after formal establishment of its configuration identification. Includes the Contractor's engineering release and production cut-in systems and the Government's field change and modernization programs.

Configuration Control Board. The authority responsible for evaluating and approving or disapproving proposed engineering changes, and ensuring implementation of the approved changes. The board membership is composed of representatives from the functional areas such as program/project management, engineering, CM, procurement, integrated logistics support, training and support activities.

The CCB chairman makes the final decision on all engineering changes. The board secretariat coordinates the proposed engineering change, schedules the meeting of the board, and records the findings/positions of each member of the board and the chairman's decision.

Configuration Control Board Request/Directive. Decisions by the board are documented by requests or directives. When the board approves or disapproves a proposal or a request, the decision is documented by a directive. When the board proposes an engineering change or requests additional supporting information in processing a proposed change, the action is documented by a request. The request/directive is the catalyst for the preparation of a contract change order/request and/or the implementing directive/order.

Configuration Control Review Board. CCRBs are conducted at field activities to perform technical reviews of proposed ECPs in support of the PD CCBs. These review boards shall be composed of personnel with expertise in the types of systems/equipments assigned to the field activity and are constituted in accordance with local instructions. Although these boards do not have approval/disapproval authority, they are required to submit recommendations as to its approval or disapproval.

Configuration Identification. The selection of the documents; or the documents, the data contained in the documents, supply and catalog identifiers, and the labeling affixed to the item. The documents identify and define the item's functional and physical

characteristics in the form of specifications, drawings, associated lists, logic diagrams, flow charts, technical manuals, interface control documents, test and evaluation plans and reports, and documents referenced therein. Through the configuration audit functions, the configuration identification is selected, prepared, reviewed, submitted, verified, approved, baselined, and modified when changes are approved. The configuration identification which is to comprise a baseline may be approved incrementally or as a single event. The incrementally approved portions are considered conditionally approved and are placed under Government control. Prior to Government approval, the configuration identification is considered to be preliminary. The preliminary configuration identification is controlled by the contractor. When fixed at a specific time in the acquisition cycle, the preliminary configuration identification is approved and a baseline is established. The baselines, plus approved changes from those baselines, constitute the current configuration identification. The contractor and the Government shall have separate but coordinated configuration control of the baselines and the current configuration identification. The configuration identification is developed and maintained in three separate evolutions, each in preparation for establishing corresponding baselines and maintaining the current configuration identification. The three levels of configuration identification are:

a. Functional Configuration Identification (FCI). Prescribes the Configuration Item's:

(1) Functional Characteristics;

(2) Tests required to demonstrate the achievement of specified functional characteristics;

(3) Necessary interface characteristics with interfacing Configuration Items; and,

(4) Design constraints, such as envelope dimensions, unit and higher level standardization, use of inventory items, and integrated logistic support, survivability and environmental requirements.

b. Allocated Configuration Identification (ACI). Prescribes the Configuration Item's:

(1) Functional characteristics that are allocated from those of the higher level Configuration Item or those to a lower level;

(2) Tests required to demonstrate achievement of its allocated functional characteristics;

(3) Interface requirements with interfacing Configuration Items; and,

(4) Additional design constraints, such as interface dimensions, part and higher level standardization, use of inventory items, integrated logistic support requirements, and memory and input/output reserve requirements.

c. Product Configuration Identification (PCI). Defines the configuration of the item during the Production and Deployment, and Operations and Support phases of its life cycle, and which prescribes:

(1) All necessary physical characteristics of the Configuration Item, including construction/fabrication/manufacturing/production processes and procedures;

(2) The selected functional characteristics designated for production acceptance testing;

(3) The production acceptance tests and corresponding evaluation criteria; and,

(4) The software for the system, as defined by the accepted SPS.

Configuration Item (CI). Material items designated by DoD components for Configuration Management. They may differ widely in complexity, size and kind (e.g., an aircraft, ship, mobile test unit, navigation system, embedded computer, computer program, facility, electronic system, test meter or a round of ammunition). (DoDD 5010.19)

During the acquisition phase, Configuration Items are only those specification items that are referenced directly in a contract. During the Operations and Support phase, any item designated for integrated logistics support (including parts support), is a Configuration Item. A CI may be an aggregation or discrete portions of fixed installations, hardware, firmware and/or computer programs which satisfy an end use function. Also, see item, item category, item level and lot.

Configuration Management. A discipline applying technical and administrative direction and surveillance to (1) identify and document the functional and physical characteristics of a Configuration Item, (2) control changes to those characteristics, (3) record and report change processing and implementation status, and (4) review and audit the system and the process. Configuration Management includes the following elements:

a. Configuration Identification

b. Technical Reviews

c. Configuration Audits

d. Configuration Control

e. Configuration Status Accounting

NOTE: This definition has been condensed by not defining each element, and expanded to include the term "element". Expanded and additional definitions for each of the above elements are contained in this appendix.

Configuration Management Plans. The contractor's and DoD component's office of responsibility planning, procedural and historic documents for the implementation and coordination of Configuration Management for one or more Configuration Items. Each Configuration Item shall be documented by a CM plan; each plan may address a single CI or an aggregation of CIs which satisfies a single end use function. A CM plan describing software is referred to as a Software Configuration Management Plan (SCMP).

Configuration Management Program. An acquisition and logistics program to achieve uniformity in CM procedures and practices to ensure operational efficiency and control life-cycle costs of Configuration Items within the DoD and between DoD and industry. The program is defined in detail by the DoD Standardization Program Plan for Configuration Management.

Configuration Record. A permanent file of the current configuration identification of the Configuration Item, and the status of configuration change in process which provides traceability to the configuration baselines.

Configuration Status Accounting. The recording and reporting of the information that is needed to manage configuration effectively, including a listing of the approved configuration identification, the status of proposed changes to configuration, and the implementation status of approved changes.

Contract. When the term is capitalized, a contract is the legal agreement between DoD and industry, or similar internal agreement wholly within the Government, for the development, design, testing, production, maintenance, or modification of an item. If the term is not capitalized, the agreement is strictly between DoD and industry.

Contractor. A contractor may be a Government or industry individual, partnership, company, corporation, association, or activity having a contract with the procuring activity for the design, development, fabrication/manufacture/production, maintenance, modification or supply of items under the terms of a contract. A Government activity performing any or all of the above actions is considered to be a contractor for CM purposes.

Contractor and Government Entity Code. A five-digit numeric code which identifies the manufacturer of an item. Assigned codes are contained in Cataloging Handbooks H4-1 and H4-2.

Cost. See Life-Cycle Cost.

Critical Design Review. The CDR assures that the recommended design satisfies the requirements of the SRS and IRSs. At the CDR, the detailed design documents are reviewed. A primary product of the CDR for software is the Government and contractor concurrence on the Software Detailed Design Documents that will be released for coding and unit testing.

Critical Item. An item within a Configuration Item which, because of special engineering or logistic considerations, requires an approved specification to establish configuration control at the unit level.

Data. Recorded information regardless of form or characteristics. See technical data.

Data Base Design Document. Describes the contents, design, and structure of one or more data bases. The data base may be within a CSCI, or it may be a separate CSCI by itself. The DBDD is reviewed at the PDR, CDR, and TRR.

Deficiencies. Deficiencies that may be identified during technical reviews and configuration audits consist of two types: (1) conditions or characteristics in a Configuration Item which are not in compliance with specified configuration identification, or (2) inadequate (or erroneous) configuration identification which has resulted, or may result, in CIs that do not fulfill contract and/or approved operational requirements.

Design Agent. The design agent is designated by the PMW for life-cycle support. The PMW shall retain ultimate responsibility although the PMW may delegate authority to a design agent. The design agent may be either the prime contractor, government activity or support contractor. If a contractor is designated as the design agent, then approval and acceptance authority will be limited. The design agent:

a. Reviews, approves, and accepts for the Government the Design Disclosure Package (Reprocurement Package).

b. Reviews and accepts the ILS data, including but not limited to, training, spares, PSD, Allowance Parts List, technical manuals and maintenance data.

c. Screens and consolidates recommended changes from all sources. Provides technical justification for proposed changes to the Design Disclosure Package and/or the ILS data. This includes the responsibilities for the Configuration Accounting Agent (CAA), CCRB or MRB for RFDs and RFWs. The design agent is also responsible for documenting proposed changes (DD Form 1693, MIL-STD-481, DOD-STD-480 limited data elements only, or contractor generated form/letter) for submittal to the PMW for approval to pursue a change.

d. When directed by the PMW, prepares the DD Form 1692 (DOD-STD-480) and provides detailed justification for the proposed change.

e. Ensures incorporation of all approved changes into the Design Disclosure Package and ILS Data.

f. When directed by the PD and coordinated with SPAWAR 003, installs approved field changes and reports accomplishment.

Developmental Configuration. Contractor's software and associated technical documentation that defines the evolving configuration of CSCI during development. It is under the development contractor's configuration control and describes the software configuration at any stage of the design, coding and testing effort. Any item in the developmental configuration may be stored on electronic media, or may be in hard copy, or both.

Design Disclosure Package. A DDP identifies and describes the functional and physical characteristics of a CI. A DDP consists of product definition , and engineering support data. Product definition includes specifications, engineering drawings, logic diagrams, flowcharts and interface control documents. Engineering support data includes various studies, reports, minutes of meetings and technical reviews. A DDP also provides an audit trail throughout an item's life cycle.

Deviation. A written authorization, granted prior to the production of an item, to depart temporarily from a particular performance or design requirement of a specification, drawing, or other contract document. The authorization is granted for a specific number of items and/or a specific period of time. The item(s)

is/are considered suitable for use "as is" for a specified period of time or quantity of items, until reworked by an approved method.

a. Minor. A deviation shall be designated as minor when:

(1) A classification of defects utilizing the definitions of MIL-STD-109 exists, and the deviation consists of departure from a characteristic in the documentation which is classified in the contract document as minor, or

(2) The deviation consists of a departure which involves none of the factors listed in paragraph 7.2.2b or 7.2.3b of DoD-STD-480.

b. Major. A deviation shall be designated as major when:

(1) A classification of defects utilizing the definitions of MIL-STD-109 exists, and the deviation consists of a departure from a characteristic in the documentation which is classified in the classification of defects as major, or

(2) The deviation consists of a departure involving health, performance, interchangeability, effective use or operation, weight, or appearance (when a factor).

c. Critical. A deviation shall be designated as critical when:

(1) A classification of defects utilizing the definitions of MIL-STD-109 exists, and the deviation consists of a departure from a characteristic in the documentation which is classified in the classification of defects as critical, or

(2) The deviation consists of a departure involving safety.

Document. "Document" can be the specifications, drawings, sketches, lists, standards, pamphlets, reports, and printed, typewritten or other information, relating to the design, procurement, manufacture, test or inspection of items or services under the contract.

DoD Components. A collective term for the military departments and defense agencies of the Department of Defense.

Effectivity. A method of specifying items on which configuration identification is applicable. Effectivity of configuration identification is expressed in terms of the serial number, lot number, revision, version, module, etc., of the Configuration Item to which the configuration identification applies.

Engineering Change. An approved alteration in the configuration of an item after formal establishment of its configuration identification. Approval of the change is in response to an Engineering Change Proposal or Request for Deviation or Waiver.

Engineering Change Priorities. The rank assigned to a Class I engineering change which determines the methods and resources to be used in review, approval, and implementation.

a. Emergency. An emergency priority shall be assigned to an Engineering Change Proposal for either of the following reasons:

(1) To effect a change in operational characteristics which, if not accomplished without delay, may seriously compromise the national security, or

(2) To correct a hazardous condition which may result in fatal or serious injury to personnel or in extensive damage or destruction of equipment. A hazardous condition usually will require withdrawing the item from service temporarily, suspension of the item operation, or discontinuance of further testing or development pending resolution of the condition.

b. Urgent. An urgent priority shall be assigned to an Engineering Change Proposal for any of the following reasons:

(1) To effect a change in operational characteristics which, if not accomplished expeditiously, may seriously compromise the mission effectiveness of deployed equipment.

(2) To correct a potentially hazardous condition, of which the uncorrected existence could result in injury to personnel or damage to equipment; a potentially hazardous condition compromises safety and embodies risk, but within reasonable limits, permitting continued use of the affected equipment, provided the operator has been informed of the hazard and appropriate precautions have been defined and distributed to the user.

(3) To meet significant contractual requirements (e.g., when leadtime will necessitate slipping approved production, activation, or construction schedules if the change were not incorporated).

(4) To effect an interface change which, if delayed, would cause a schedule slippage or increase cost.

(5) To effect, through value engineering or other cost reduction efforts, net life-cycle savings to the Government of a total of more than $100,000, where expedited processing of the change will be a major factor in realizing these lower costs.

c. Routine. A routine priority shall be assigned to a proposed engineering change when Emergency or Urgent is not applicable.

Engineering Change Proposal. A term which includes both a proposed engineering change and the documentation by which the change is described and suggested. An ECP may be hardware only, software only or combined hardware/software.

a. Formal Engineering Change Proposal. When the proposal is fully engineered, documented, and priced in accordance with this regulation, it is considered a formal Engineering Change Proposal.

b. Preliminary Engineering Change Proposal. Under certain criteria (e.g., the Government's desire to limit cost growth or design changes) a preliminary Engineering Change Proposal is required prior to the submission of a formal proposal. A preliminary ECP is a useful tool for reducing the number of unacceptable formal ECPs and avoiding unnecessary associated costs. The preliminary proposal also saves time by ensuring that the concept of the formal proposal will be acceptable. Essentially, the preliminary proposal simply identifies the item(s) and contract(s) affected, how and when the need for change was recognized, states the problem and alternative solutions including the impact of not making a change, a rough description of the proposed change, and an estimate of cost or range of cost to develop the formal proposal and develop, test, evaluate, produce and incorporate the change. Approval of the preliminary proposal authorizes the contractor or Design Agent to develop a final ECP, including development and testing of a FC prototype, if applicable.

c. Value Engineering Change Proposal (VECP). A VECP, in accordance with DOD-STD-480A, is a cost reduction proposal submitted by a contractor to the Government which, if approved, results in a change on contract.

Engineering Change Proposal Tracking System. A software system to maintain a record of ECP actions and status. The system is designed to assist all PDs and PMWs in fulfilling the requirement to maintain an ECP tracking system throughout the ECP life cycle.

Engineering Release System. The method of formally issuing technical data to ensure that an item is made in accordance with the item's approved configuration identification.

Establish. A term used when the configuration identification is accepted by the Government (see acceptance) or recognized by the contractor as the documentation that has reached a state of development that describes the intended/desired functional and/or

physical characteristics of the item and must be made firm and be controlled. The configuration identification is then established at one of the three configuration baselines.

Field Change. Any modification or alteration made to an equipment after delivery to the Government. The term Field Change applies to a hardware only or a hardware/software change; it does not apply to software only changes.

Field Change Installation Program. SPAWAR maintains configuration information for all equipment under SPAWAR cognizance that has had field changes or is scheduled to receive field changes. The configuration status information is maintained by the SPAWAR Field Change Installation Program.

Field Change Kit. The accumulation of the material and documents necessary for the incorporation of an engineering change to an item, the item having been delivered to the Government or having progressed through production past the stage where the change could not be made without rework.

Final Product Baseline. See Configuration Baseline, subparagraph c.

Firmware. An assembly composed of a hardware unit and a computer program integrated to form a functional entity whose configuration cannot be altered during normal operation. The computer program is stored in the hardware unit as an integrated circuit with a fixed logic configuration that will satisfy a specific application or operational requirement. It is frequently referred to as ROM, PROM, or EPROM. The software stored in these devices must be developed, tested, and managed as software.

Firmware Support Manual. The FSM defines the information necessary to modify or to replace the firmware devices in the mission critical computer system. Reviewed at the CDR, TRR, FCA, and PCA.

Formal Engineering Change Proposal. See Engineering Change Proposal.

Formal Qualification Review. The test, inspection, or analytical process by which a group of configuration items comprising the system are verified to have specific contracting agency contractual performance requirements (specifications or equivalent). This review does not apply to hardware or software requirements verified at FCA for the individual configuration item.

Form, Fit, and Function. A collective term which describes the configuration comprising the physical and functional characteristics of an item as an entity but not including any characteristics of the internal parts making up the item.

a. Form. Alternative methods for satisfying mission needs (e.g., to satisfy the need for transporting large quantities of material may take the form of an aircraft, ship, train, bus, etc.).

b. Fit. The ability for an item to interface with or be an integral part of another item (e.g., a navigation system to be installed in an aircraft).

c. Function. The manner in which an item performs its mission (e.g., a ship that is design for anti-submarine warfare).

Full Rate Production and Initial Deployment Phase. See Acquisition Phase.

Full Scale Development and Low Rate Initial Production Phase. See Acquisition Cycle.

Functional Baseline. See Configuration Baseline.

Functional Characteristics. Quantitative performance, operating and logistics parameters and their respective tolerances, including all performance parameters, such as range, speed, acceleration, capacity, lethality, reliability, maintainability, survivability, interchangeability, interoperability, safety, etc.

Functional Configuration Audit. See Configuration Audit.

Functional Configuration Identification. See Configuration Identification.

Group. See Item Level.

Hardware. Articles made of material, such as tools, fittings, machine parts, weapons, vehicles, but does not include computer programs and firmware, and technical documentation. The ROM Chip that software is stored in is hardware; the program or data stored in that chip is software.

Hardware/Software. Hardware or software, or a combination of both, in which the software includes only that associated with hardware for operational use, e.g., computer programs for command and control, handbooks for operations, maintenance, etc., and excludes fabrication specifications, drawings, etc.

Implementing Directive/Order. A formally documented notification of an approved engineering change to a configuration item in the inventory of DoD operating forces or integrated logistics support activities provided to those activities responsible for coordinating the incorporation of the approved change.

Interface Requirements Specification. Defines the interfaces and qualification requirements for a CSCI within the system, segment, or prime item. The IRS is reviewed at the SDR and approved (baselined) at the SSR.

Integrated Logistic Support. A composite of the elements necessary to assure the effective and economical support of a system or equipment at all levels of maintenance for its programmed life cycle.

a. A unified and iterative approach to the management and technical activities necessary to:

(1) Cause support considerations to influence requirements and design

(2) Define support requirements that are optimally related to the design and to each other

(3) Acquire the required support

(4) Provide the required support during the operational phase at minimum cost

b. Integrated logistic support is comprised of the following elements:

(1) Maintenance plan

(2) Manpower and personnel

(3) Supply support (including initial provisioning)

(4) Support and test equipment

(5) Training and training devices

(6) Technical data

(7) Computer resources support

(8) Packaging, handling storage, and transportation

(9) Facilities

(10) Design Interfaces

Interface. A common boundary between two or more items. The boundary may be physical (mechanical or electrical) and/or functional, or it may be a software interface.

Interchangeability. Standardization of the functional and physical characteristics of items to enhance the substitution of one item for another.

Interface Control. The delineation of the procedures and documentation, both administrative and technical, contractually necessary for identification and management of functional and physical characteristics between two or more Configuration Items that are provided by different contractors or offices of primary responsibility, and the resolution of problems thereto.

Interface Design Document (IDD). Describe the details of both intersystem and intrasystem interfaces. It is based on the IRS, and reviewed at the CDR and TRR.

Interface Requirement Specification. A document that describes the mutually agreeable CM practices and procedures for a given Configuration Item when more than one office of primary responsibility is designated to perform management functions for items that form or interface with the Configuration Item. It can also take the form of an Interface Design Specification (IDS) or WSCID.

Interoperability. Standardization of the functional characteristics of items to enhance their ability to work together in the same operational environment.

Inventory Control Point. The designated activity that provides supply support for items in each DoD component's inventory.

Item. (When the term is used without a modifier.) Any level of hardware assembly below a system (i.e., subsystem, equipment, component, subassembly, or part). Also, see Configuration Item, Critical Item, and Privately Developed Item.

Item Category. Defense material items are categorized as follows:

(1) Aircraft

(2) Missiles

(3) Space

(4) Ships

(5) Surface vehicles

(6) Electronics

(7) Ordnance

Each of the above categories has subcategories for related support equipment and facilities (e.g., test equipment, test mock-ups, training equipment, and their associated facilities, etc.), spares and repair parts.

Item Level. Items are categorized in levels from the simplest division to the more complex as follows:

a. Part. One or more pieces joined together that are not normally subject to disassembly without destruction of designed use.

b. Subassembly. Two or more parts that form a portion of an assembly or a unit replaceable as a whole, but having a part or parts that are individually replaceable.

c. Assembly. A number of parts or subassemblies, or any combination thereof, joined together to perform a specific function and are capable of disassembly; the distinction between an assembly and a subassembly being determined by the individual application (i.e., an assembly in one instance may be a subassembly in another when it forms a portion of a higher level assembly).

d. Unit. An assembly or any combination of parts, subassemblies and assemblies joined together, and normally capable of independent operation in a variety of situations; (this term replaces the term "component"). For software, a unit is the lowest meaningful compilable group of statements that relate together and are tested together.

e. Group. A collection of units, assemblies, or subassemblies that are not capable of performing a complete operational function; it may be a subdivision of a set or may be designed to be added to or used in conjunction with a set to extend the function or the utility of the set.

f. Set. One or more group units, assemblies, subassemblies and parts connected together or used in association to perform an operational function. (Also, a collection of related items (e.g., tool set, drawing set, set of tires).

g. Subsystem. A combination of sets, groups, etc., that performs an operational function within a system and is a major subdivision of the system.

h. System

(1) General. A composite of equipment, skills and techniques capable of performing and/or supporting an operational role; a complete system includes all of the associated equipment, facilities, material, software, technical documentation, services and personnel required for operations and support to the degree necessary for self-sufficient use in its intended operational environment.

(2) Major System. Those systems (in accordance with OMB Circular A-109 and DoDD 5000.1) that (a) are directed at and critical to, fulfilling a DoD or DoD Component mission, (b) entail the allocation of relatively large resources, and (c) warrant special management attention.

Life Cycle. The life span of a Configuration Item. The life cycle begins with the documenting of the mission element needs statement (or equivalent), follows the acquisition cycle, the operations and support phase, and is rejuvenated by a modernization program or ends with the disposal of the item. Configuration Management, however, continues on as long and active as the configuration identification of the item is maintained.

Life-Cycle Cost. The sum total of the direct, indirect, recurring, non-recurring, and other related costs incurred, or estimated to be incurred, in the design, development, production (including manufacture and fabrication), acquisition, operation, maintenance, modernization, and support of a Configuration Item over its anticipated life span. It includes R&D, O&MN, OPN, WPN, APN, and all other "colors" of money used.

(1) Non-Recurring Costs. One-time costs which will be incurred if an engineering change is ordered and which are independent of the quantity of items changed, such as: cost of redesign, special tooling, or qualification.

(2) Recurring Costs. Costs which are incurred for each item changed or for each service or document ordered.

Lot. A designated quantity of Configuration Items which is manufactured, fabricated, or assembled by one producer under uniform conditions and which is expected to function in a uniform manner. A lot is designated and identified by assignment of a lot number.

Lot Number. A code number systematically assigned to each designated quantity of Configuration Items at the time of production or modification that uniquely identifies the particular lot from other lots. The lot number is not to be confused with other identification numbers such as the National Stock Number.

Milestone. See Acquisition Cycle.

Nomenclature. An alphanumeric type designation and descriptive title assigned by, and used by the DoD for standardization of identification and for design control of the Configuration Item.

Non-Development Item (NDI). An already developed and available hardware and/or software that is capable of fulfilling Navy requirements, thereby minimizing or eliminating the need for costly, time-consuming, Government-sponsored R&D programs. NDIs are usually off-the-shelf or commercial-type products, but may also include equipment already developed by or for the Navy, other military services or foreign military forces.

Notice of Revision. A document (DD Form 1695) used to propose revisions to a drawing or list, and after approval, to notify users that the drawing or list has been, or will be, revised accordingly.

Office of Primary Responsibility. The responsible Government authority designated to apply and implement CM for one or more Configuration Items.

Operational Concept Document. The OCD identifies and describes the mission of the system, the system operational and support environments, and the functions and characteristics of the computer system within the overall system.

Original (Master) Drawing. The initial drawing, on which the revision record is kept and recognized as official by the design activity.

Part. See Item Level.

Part Number. An identifying number assigned to each discrete Configuration Item. Configuration Items that are interchangeable may have the same part number.

Physical Characteristics. Quantitative and qualitative expressions of material features, such as composition, dimensions, finishes, form, fit, and their respective tolerances.

Physical Configuration Audit. See Configuration Audit.

Preliminary Design Review. The purpose of the PDR is to review the top level design, test plans, and preliminary operation and support documents with the contracting agency and to demonstrate to the contracting agency that: (1) the Software Top Level Design Statement satisfies the software requirements allocated from the higher level documents, (2) the test plans establish adequate test criteria for each CSCI and address all specified requirements, and (3) the preliminary versions of the CSOM, SUMs, CSDM, and CRISD will, in final form, adequately address the operation and support of the computer system. In addition, the PDR may review preliminary versions of the SDDD, IDDs, and DBDDs for critical lower level elements, including external interfaces and data base(s), to demonstrate that the detailed design for critical elements will satisfy the specified requirements.

Prime Item Development Specification. A specification applicable to a complex item such as an aircraft, missile, launcher equipment, fire control equipment, radar set, training equipment, etc. A Prime Item Development Specification may be used as a functional baseline for a single item development program or as part of the allocated baseline where the item covered is part of a larger system development program.

Privately Developed Item. An item completely developed at private expense and acquisitioned by the Government as a production or "off-the-shelf" item.

Product Baseline. See Configuration Baseline.

Product Configuration Identification. See Configuration Identification.

Production. The fabrication, manufacture, assembly, etc. of an item.

Production Cut-In. That item in production designated as the first item to have incorporated an approved engineering change. Designation is usually identified by serial or lot number.

Production Effectivity: Point at which a change will be put into the CI during production. This point is identified by the CI's serial number or other approved identification.

Production Item. An item in the production phase of the acquisition cycle.

Production Readiness Review. The PRR is intended to determine the status of completion of the specific actions which must be satisfactorily accomplished prior to executing a production go-ahead decision. The review is accomplished in an incremental

fashion during the Full Scale Development and Low Rate Initial Production Phase, usually two initial reviews and one final review to assess the risk in exercising the production go-ahead decision. In its earlier stages, the PRR concerns itself with gross level manufacturing concerns such as the need for identifying high risk/low level manufacturing processes or materials or the requirement for manufacturing development effort to satisfy design requirements. The reviews become more refined as the design matures, dealing with such concerns as production planning, facilities allocation, incorporation of producibility-oriented changes, identification and fabrication of tools/test equipment, long lead item acquisition, etc. Timing of the incremental PRRs is a function of program posture and is not specifically looked into other reviews.

Program Director/Program Manager Warfare. Are responsible for research, design, development, test, evaluation, procurement, quality control, reliability, accuracy, surveillance, maintenance, configuration control, logistic support, performance, effectiveness, human factors and safety of their systems and and their supporting equipments and software. More specifically they have responsibility for specifications, design disclosure documentation, quality assurance, correction of trouble and failures, maintenance, logistics planning and support, installation, interfaces with other equipment and systems, alternations, operation and maintenance manuals and documentation and support of system/equipment in service use in the fleet or ashore including shipyard periods. They will also accomplish similiar functions to the extent funded/tasked in support of Foreign Military Sales (FMS) programs. The responsibilities of the PDs and PMWs have been listed together, however, the individual PD will be allocated and carried out within the directorate.

Proposed Notice of Change. A PNOC is a document that proposes a change to an authenticated WSCID. A PNOC describes specific changes in detail, and the reasons for the changes, including references to the ECPs by Element Managers, when applicable.

Provisioning Technical Documentation. The configuration identification which is used to identify the spares and repair parts needed to support a Configuration Item.

Repair Parts. Individual parts or non-repairable subassemblies and assemblies required for the repair and periodic maintenance of higher level Configuration Items.

Request for Deviation. A written request (DD Form 1694) to depart temporarily from a particular performance or design requirement of a specification, drawing, or other contract document for a specific number of items and/or a specific period of time when

the reason for the request is discovered prior to the production of the item. See also, Deviation.

Request for Waiver. A written request (DD Form 1694) to accept a specific number of items that during or after production, having been submitted for inspection, review, audit or acceptance, are found to depart from a particular performance or design requirement of a specification, drawing, or other contract document, but nevertheless, is considered suitable for use "as is" or after rework by an approved method. See also, Waiver.

Retrofit. Incorporation of an engineering change (at any level) in accepted or in-service items.

Revision. Any change to an original drawing after that drawing has been released for use.

Serial Number. An identifying number for each Configuration Item in a family of like CIs that may be assigned when the need for traceability is justified. The serial number is unique for its family of configuration items, non-significant, permanent, and limited to six numeric digits sequentially assigned in numerical order from one to 999,999. Where the quantity of like Configuration Items exceeds 999,999 a single alpha prefix shall precede the numeric character(s) (e.g., A1 to A99,999 through Z1 to Z99,999).

Ship Configuration and Logistics Support Information System. The purpose of SCLSIS is to provide an accurate, up-to-date, understandable account of equipment installed in each ship and to provide associated logistic support information to improve its usefulness to both maintenance and logistics personnel, and to maintain this information continuously current throughout the ship's life.

Software. See Computer Software.

Software Configuration Management Plan. See Configuration Management Plan.

Software Detail Design Document. The SDDD describes the detailed design for each CSCI or software component. There may be one or more SDDD for each CSCI. The SDDD is approved at the CDR.

Software Development File(s). Each SDF may serve a single unit or logically related group of units. Unit requirements, design considerations, and constraints, schedule, status information, and test documentation shall be incorporated into the corresponding SDF. All SDFs shall be in the format described in either the Software Standards and Procedures Manual (SSPM) or the SDP. To

reduce duplication, SDFs should not contain information provided in other documents. SDFs may be generated, maintained, and controlled by automated means.

Software Development Plan. The SDP includes descriptions of all organizations and procedures to be used in the development effort. The SDDD is normally delivered as part of the proposal, and updated and finalized prior to the SRR.

Software Product Specification. The SDDD is the finalized approved version of the design documents and software listings contained in the developmental configuration. The SPS describes the detailed configuration of the qualified (or to be qualified) CSCI. When accepted after a successful FCA and PCA, the SPS forms the software product baseline. The STLDD, SDDD, DBDD, and IDD all become part of the SPS after the FCA and PCA.

Software Programmers Manual. The SPM defines the information which facilitates programming or reprogramming software for the target computer. It is reviewed at the CDR and TRR.

Software Quality Evaluation Plan. The SQEP describes the organizations and procedures to be used by the contractor to determine the quality of the software and associated documentation and activities and to perform related tasks that are an outgrowth of the evaluation activities. The SQEP is used by the government to monitor the procedures, management, and contract work effort of the organization performing the software quality evaluation.

Software Requirements Specification. The SRS defines system requirements allocated to a specific CSCI. It is authenticated at the SSR and establishes the allocated baseline for the CSCI. The interface requirements specification describes in detail the requirements for one or more CSCI interface. Interface requirements shall include the interface between CSCIs, or between CSCIs and Hardware Configuration Items (HWCIs). It is authenticated at the SSR and establish the allocated baseline for the CSCI.

Software Specification Review. The SSR is a review of the formalized CSCI requirements and operational concept. It is conducted when CSCI requirements have been sufficiently defined to evaluate the contractor's responsiveness to, and interpretation of, the system, segment, or prime item level requirements. A successful SSR is predicated upon the contracting agency's determination that the SRS, IRS(s), and OCD form a satisfactory basis for proceeding into preliminary software design. The software ABL is established at the SSR.

Software Standards and Procedures Manual. The SSPM contains the standards, procedures, guidelines, and restrictions to be used by the contractor in the development of the CSCIs. The standards and procedures of the SSPM are used to ensure uniformity among the CSCIs in the system as they progress through the development cycle.

Software Test Description. For each CSCI, defines test cases for each formal test of the CSCI described in the STP. The STD is reviewed at the CDR and TRR.

Software Test Plan. The STP defines the plans for informal and formal testing of the CSCI. The STP is reviewed at the PDR, CDR, and TRR.

Software Test Procedure. Describes the detailed procedures for conducting formal CSCI tests and for analyzing formal CSCI test results. The STPR is reviewed at the CDR and TRR.

Software Test Report. The STR documents the results of formal CSCI tests, test data analysis, and any deviations or discrepancies discovered in the testing. The STR is required for a FCA and PCA.

Software Top Level Design Document. The STLDD defines the top level design of the CSCI, and is developed from the SSS and SRS. It is reviewed at the SSR and approved at the PDR.

Software Users Manual. The SUM defines the instructions for users to execute each CSCI. It is reviewed at the PDR, CDR, TRR, FCA, and PCA.

Spares. Repairable items at the assembly level or below used for maintenance replacement purposes in higher level Configuration Items.

Specification. A document intended primarily for use in the acquisition process which clearly and accurately describes the functional and/or physical requirements for items, materials, or services including the procedures by which it will be determined that the contract requirements have been met. Specifications may be hardware only, software only, or hardware/software specifications. The following are types of specifications:

a. General Specification. A document which covers the requirements common to different types, classes, grades, and/or styles of items or services.

b. Detail Specification. A document which covers (either within itself or by referencing and supplementing a general

specification) the complete requirements for only one type of item, or for a limited number of types, classes, etc., of similar characteristics.

c. System Specification. A document which states the technical and mission requirements for a system as an entity, allocates requirements to functional areas or other Configuration Items, and defines the interfaces between or among them.

d. Development Specification. A document applicable to an item below the system level which states performance, interface, and other technical requirements in sufficient detail to permit design, engineering for service use, and evaluation.

e. Product Specification. A document applicable to a production item below the system level which states the item's characteristics in a manner suitable for procurement, production, and acceptance.

f. Functional Specification (Performance). A product specification which states: (1) the complete performance requirements of the item for its intended use, and (2) the item's necessary interface and interchangeability characteristics. The specification covers form, fit, and function requirements.

g. Fabrication Specification (Design). A product specification which states: (1) a detailed description of assemblies and lower level items, usually by prescribing compliance with a set of drawings, and (2) those performance requirements and corresponding tests and inspections necessary to assure proper fabrication, adjustment, and assembly techniques.

h. Program Peculiar Specification. A document prepared in accordance with MIL-STD-490 and MIL-S-83490 that has application to a single or joint acquisition project.

i. Military (DoD) Specification. A document prepared in accordance with MIL-STD-961 that has general application to items designated for standardization acquisition and logistics programs.

Specification Change Notice. A document (DD Form 1696) used to propose, transmit, and record changes to a specification.

Standard (Military or DoD). A document prepared in accordance with MIL-STD-962 that establishes engineering and technical requirements for processes, procedures, practices, and methods that have been adopted as standard. Standards may also establish requirements for selection, application, and design criteria for material.

Standardization Document Improvement Proposal. A document (DD Form 1426) used to propose a change to a military or DoD specification or standard.

Subassembly. See Item Level.

Subcontractor. A subcontractor is an individual, partnership, corporation, or association, who (which) contracts with a Contractor to design, develop and manufacture items, which are or were, designed specifically for use in a military application.

Subsystem. See Item Level.

Support Equipment. Support equipment is that equipment required to make an item, system, or facility operational in its intended environment. This includes all equipment required to maintain and operate the item, system, or facility, including computer support related thereto.

System. See Item Level.

System Design Review. The SDR is conducted to evaluate the optimization, correlation, completeness, and risks associated with the allocated technical requirements. Also included is a summary review of the system engineering process which produced the allocated technical requirements and of the engineering planning for the next phase of effort. Basic manufacturing considerations will be reviewed and planning for production engineering in subsequent phases will be addressed. The review will be conducted when the system definition effort has proceeded to the point where system characteristics are defined and the configuration items are identified. The software FBL is established at the SDR.

System Engineering. System engineering, as it relates to configuration management, is the application of scientific and engineering efforts to transform an operational need into a description of system performance parameters and a system configuration must be ultimately called out in CI specifications. In this way, the system engineering agency or contractor generates requirements for configuration which will satisfy the operational need. Constrained technically only by the content of the system specification, the system engineering agency or contractor is responsible for assessing the impact of changes to CI specifications or to the system specification. This includes modifications to operational systems.

System Requirements Review. The objective of the SRR is to ascertain the adequacy of the contractors efforts in defining system requirements. It will be conducted when a significant

portion of the system's functional requirements has been established.

System Segment Specification. A specification similar in format to a system specification, identifying a discreet package of system performance requirements, functional interfaces, and CIs contracted to one contractor or assigned to one Government organization directly responsible to the procuring activity for that part of a system's total performance. The SSS may be software only, hardware only or hardware/software.

Software Users Manual. The SUM defines the instructions for users to execute each CSCI. It also provides expected outputs and corrective measures when the expected output is not obtained.

Tailoring. The process by which specific requirements (sections, paragraphs, or sentences) of the selected specifications, standards, DIDs and related documents are evaluated to determine the extent to which they are most suitable for the acquisition or logistic support of a Configuration Item, and the modification of these requirements to ensure that each achieves an optimal balance between operational needs and cost. Tailoring of data requirements shall consist only of the exclusion of those sections, paragraphs, or sentences from an approved document's information requirement or Data Item Description (i.e., "downward" tailoring only).

Technical Reviews. The purpose of technical reviews is to determine that the development of the CI has reached contract milestone requirements. The purpose of CM in the technical review process is to establish the documentation requirements and CI selection criteria.

Test Readiness Review. The purpose of the TRR is to review the informal test results, formal test procedures, and operation and support documents with the contracting agency and to demonstrate to the contracting agency that: (1) the STPR is complete, (2) the contractor is ready to begin formal testing, and (3) the updated versions of the CSOM, SUM(s), CRISD and CSDM will, in final form, adequately address the operation and support of the computer system.

Total Program Needs. A general term used for the life-cycle requirements and considerations given to the development, production, operation and support of a Configuration Item. Total program needs include:

- Program Management
- Schedules (e.g., development, construction, manufacturing, delivery, installation, etc.)
- Quality assurance

- Reliability
- Maintainability
- Human factors
- Interchangeability & Interoperability
- Support Equipment
- Survivability
- Nuclear hardening
- Security
- Safety
- Standardization
- Design integrity
- Test and evaluation
- Approval for production
- Availability
- Material and Operational readiness
- Training
- Facilities
- Mission requirements
- Integrated logistic support
- Competitive reprocurement
- Total life-cycle costs
- Configuration Management
- Computer Resources

Value Engineering. An organized, objective appraisal directed at analyzing the function of systems, equipment, facilities, services and supplies consistent with the requirements of performance, security, availability, safety, quality, reliability, and maintainability at the lowest cost.

Value Engineering Change Proposals. See Engineering Change Proposal.

Version Description Document. The VDD is prepared to accompany the release of each version of a CSCI and to accompany each release of an interim change (i.e., changes that occur between CSCI versions). This document records the items delivered, any changes from the previous release, any outstanding trouble reports and ECPs, and additional pertinent data relating to the status and usage of the CSCI change. The contractor prepares the VDD in accordance with the format and content of the Version Description Document Data Item Description.

Waiver. A written authorization to temporarily accept an item that is found during production, or after having been submitted to tests or inspection, to depart from a particular performance or design requirement of a specification, drawing, or other contract document. The authorization is granted for a specified number of items and/or a specific period of time. The item(s) is considered suitable for use "as is" for a specific period of time

or quantity of items, until reworked by an approved method. These definitions do not apply to TADSTAND Waivers.

a. Minor. A waiver shall be designated as minor when:

(1) An acceptable quality level is specified in the contract specification, and the waiver consists of acceptance of a lot of items having a number of minor defects in the sample equalling or exceeding the number that requires rejection of the lot.

(2) A classification of defects utilizing the definitions of MIL-STD-109 exists, and the waiver consists of acceptance of an item having a minor defect(s).

(3) The waiver consists of acceptance of an item having a non-conformance with contract or configuration identification requirements which does not involve any of the factors listed in 8.2.2c or 8.2.3b of DoD-STD-480.

b. Major. A waiver shall be designated as major when:

(1) An acceptable quality level is specified in the contract specification, and the waiver consists of acceptance of a lot of items having a number of major defects in the sample equalling or exceeding the number that requires rejection of the lot.

(2) A classification of defects utilizing the definitions of MIL-STD-109 exists, and the waiver consists of acceptance of an item having a major defect.

(3) The waiver consists of acceptance of an item having a non-conformance with contract or configuration identification requirements involving (1) health, (2) performance, (3) interchangeability, reliability, or maintainability of the item or its repair parts, (4) effective use or operation, (5) weight, or (6) appearance (when a factor).

c. Critical. A waiver shall be designated as critical when:

(1) A classification of defects utilizing the definitions of MIL-STD-109 exists, and the waiver consists of acceptance of an item having a critical defect.

(2) The waiver consists of acceptance of an item having a non-conformance with contract or configuration identification requirements involving safety.

Warfare System Controlled Interface Drawing. A WSCID is a document that, when authenticated, defines a basis for mandatory control of interfaces. The WSCID process controls changes to characteristics which affect compatibility and interoperability. WSCIDs contain both hardware and software information.

Warfare System Performance Specification. A specification(s) used to document the conversion of Battle Force level requirements contained in ORs for the WS into top level Specifications for WSE.

Work Breakdown Structure. A product-oriented family tree, composed of hardware, software, services, and other work tasks, which results from project engineering effort during the development and production of a defense material item, and which completely defines the project/program. A work breakdown structure displays and defines the product(s) to be developed or produced and relates the elements of work to be accomplished to each other and to the end product (MIL-STD-881).

THIS PAGE INTENTIONALLY LEFT BLANK

Appendix C

ACRONYMS	MEANING
ABL	Allocated Baseline
ACI	Allocated Configuration Identification
ADP	Automated Data Processing
AIT	Alteration Installation Team
APL	Allowance Parts List
APL/AEL	Allowance Parts List/Allowance Equipage List
ASI	Acquisition Streamlining Initiative
ATE	Automatic Test Equipment
BOA	Basic Ordering Agreement
CA	Configuration Audit
CAA	Configuration Accounting Agent
CAGE	Contractor and Government Entity
CASREP	Casualty Report
CCB	Configuration Control Board
CCRB	Configuration Control Review Board
CDR	Critical Design Review
CDRL	Contract Data Requirements List
CES	Contractor Evaluation System
CFE	Contractor Furnished Equipment
CI	Configuration Item
CII	Configuration Item Index
CI/CSCI	Configuration Item/Computer Software Configuration Item
CM	Configuration Management
CMC	Commandant of the Marine Corps
CNET	Chief of Naval Education and Training
CNO	Chief of Naval Operations
COMSEC	Communications Security
CRISD	Computer Resources Integrated Support Document
CRLCMP	Computer Resources Life Cycle Management Plan
CSA	Configuration Status Accounting
CSAS	Configuration Status Accounting System
CSC	Computer Software Component
CSCI	Computer System Configuration Item
CSDM	Computer System Diagnostic Manual
CSMP	Consolidated Ships Maintenance Plan
CSOM	Computer System Operator's Manual
DAB	Defense Acquisition Board
DBDD	Data Base Design Document
DCP	Department Control Point
DDP	Design Disclosure Package

Appendix C

ACRONYMS	MEANING
DM	Decision Memorandum
DoD	Department of Defense
DoDCP	Department of Defense Control Point
DoDD	Department of Defense Directive
DoDI	Department of Defense Instruction
DoN	Department of the Navy
DRRB	Data Requirements Review Board
ECP	Engineering Change Proposal
EIB	Engineering Information Bulletin
EIC	Equipment Identification Code
ETE	Electronic Test Equipment
FBL	Functional Baseline
FC	Field Change
FCA	Functional Configuration Audit
FCA/PCA	Functional Configuration Audit/Physical Configuration Audit
FCB	Field Change Bulletin
FCI	Functional Configuration Identification
FCIP	Field Change Installation Program
FMA	Field Maintenance Activity
FMECA	Failure Modes, Effects and Criticality Analysis
FMP	Fleet Modernization Program
FMS	Foreign Military Sales
FQR	Formal Qualification Review
FSD	Full Scale Development
FSM	Firmware Support Manual
FTAS	Fast Time Analyzer System
GFE	Government Furnished Equipment
GPETE	General Purpose Electronic Test Equipment
HWCI	Hardware Configuration Item
HQ	Headquarters
IDD	Interface Design Document
IDS	Interface Design Specification
ILS	Integrated Logistics Support
ILSM	Integrated Logistics Support Manager
ILSP	Integrated Logistics Support Plan
IRS	Interface Requirements Specification
ISEA	In-Service Engineering Activity

Appendix C

ACRONYMS	MEANING
JETDS	Joint Electronic Type Designation System
LLCSC	Lower Level Computer Software Component
3-M	Maintenance and Material Management
MGFEL	Master Government Furnished Equipment List
MIP	Maintenance Index Page
MIPR	Military Interdepartmental Procurement Request
MOA	Memorandum of Agreement
MOU	Memorandum of Understanding
MRB	Material Review Board
MRC	Maintenance Requirement Card
MSC	Military Sealift Command
MTBF	Mean-Time-Between-Failure
MTBO	Mean-Time-Between-Overhaul
MTBR	Mean-Time-Between-Repair
NATO	North Atlantic Treaty Organization
NAVAIR	Naval Air Systems Command
NAVELEXENGCEN	Naval Electronic Engineering Center
NAVSEA	Naval Sea Systems Command
NAVSEASYSCOM	Naval Sea Systems Command
NDI	Non-Developmental Item
NESSEC	Naval Electronic System Security Engineering Center
NOR	Notice of Revision
NSN	National Stock Number
OCD	Operational Concept Document
OLSS	Operational Logistic Support Summary
OPEVAL	Operational Evaluation
OR	Operational Requirement
OSD	Office of the Secretary of Defense
PBL	Product Baseline
PCA	Physical Configuration Audit
PCI	Product Configuration Identification
PD	Program Director
PDL	Program Design Language
PDR	Preliminary Design Review
PDREP	Product Deficiency Reporting and Evaluation Program
PD/PMW	Program Director/Program Manager Warfare
PERACRUDES	Planning and Engineering for Repair and Alterations, Cruisers and Destroyers

Appendix C

ACRONYMS	MEANING
PIDS	Prime Item Development Specification
PMS	Planned Maintenance System
PMW	Program Manager Warfare
PNOC	Proposed Notice of Change
PR	Procurement Request
PRR	Production Readiness Review
PRS	Provisioning Requirements Statement
PSD	Program Support Data
PTD	Provisioning Technical Documentation
QA	Quality Assurance
QSR	Quantity Still Required
R&D	Research and Development
RFD	Request for Deviation
RFD/RFW	Request for Deviation/Request for Waiver
RFP	Request for Proposal
RFW	Request for Waiver
RIN	Record Identification Number
SAC	Service Application Code
SAR	Shipboard Activity Report
SCIMS	SPAWAR Configuration Information Management System
SCLSIS	Ships Configuration and Logistics Support Information System
SCMP	Software Configuration Management Plan
SCN	Specification Change Notice
SDDD	Software Detail Design Document
SDF	Software Development File
SDP	Software Development Plan
SDR	System Design Review
SECAS	Ships Equipment Configuration Accounting System
SHIPALT	Ship Alteration
SLM	Ship Logistics Manager
SNAP	Shipboard Non-Tactical ADP Program
SOW	Statement of Work
SPAWAR	Space and Naval Warfare Systems Command
SPAWARSYSCOM	Space and Naval Warfare Systems Command
SPCC	Ships Parts Control Center
SPETE	Special Purpose Electronic Test Equipment
SPM	Software Programmers Manual
SPS	Software Product Specification
SQEP	Software Quality Evaluation Plan

Appendix C

ACRONYMS	MEANING
SRR	System Requirement Review
SRS	Software Requirements Specification
SSA	Software Support Activity
SSPM	Software Standards and Procedures Manual
SSR	Software Specification Review
SSS	System Segment Specification
STANAG	Standing NATO Agreement
STD	Software Test Description
STLDD	Software Top-Level Design Document
STP	Software Test Plan
STPR	Software Test Procedure
STR	Software Test Report
SUM	Software User's Manual
SUPSHIPS	Supervisor of Shipbuilding, Conversion and Repair
SYSCOM	Systems Command
TDC	Technical Data Center
TECHEVAL	Technical Evaluation
TECHEVAL/ OPEVAL	Technical Evaluation/Operational Evaluation
TLCSC	Top Level Computer Software Component
TMIN	Technical Manual Identification Numbering
TOR	Tentative Operational Requirement
TPS	Test Program Set
TRR	Test Readiness Review
TRS	Technical Repair Standard
TTE	Technical Training Equipment
VDD	Version Description Document
VECP	Value Engineering Change Proposal
WR	Work Request
WS	Warfare System
WSA&E	Warfare Systems Architecture and Engineering
WSCID	Warfare System Controlled Interface Drawing
WSE	Warfare Systems Element
WSEM	Warfare Systems Element Manager
WSF	Weapon Systems File
WSOR	Warfare Systems Operational Requirement
WSPS	Warfare Systems Performance Specification

Appendix C

THIS PAGE INTENTIONALLY LEFT BLANK

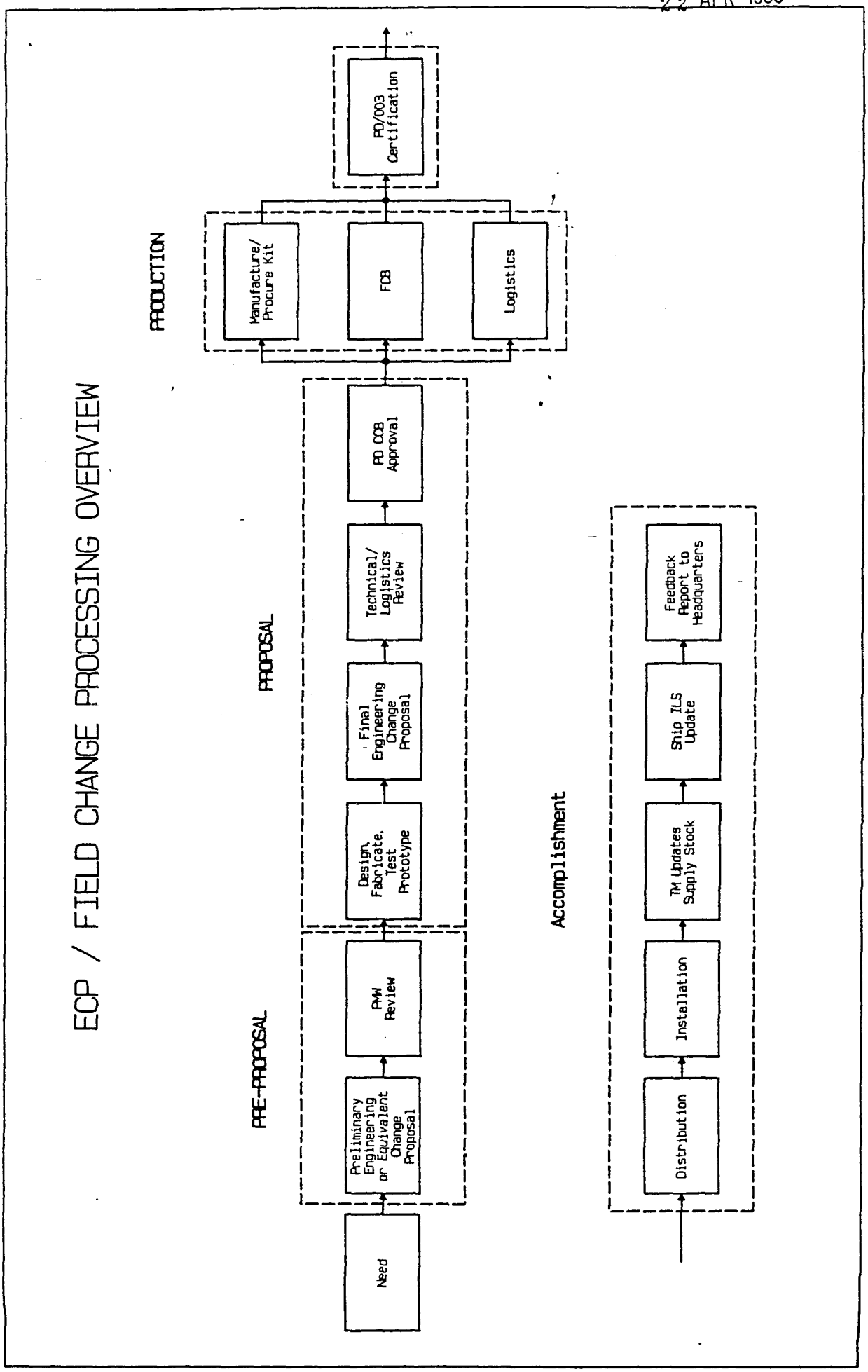
ECP / FIELD CHANGE PROCESSING OVERVIEW
PRE-PROPOSAL
PROPOSAL
PRODUCTION
Accomplishment
Need
Preliminary Engineering or Equivalent Change Proposal
PMW Review
Design, Fabricate, Test Prototype
Final Engineering Change Proposal
Technical/ Logistics Review
PD CCB Approval
Manufacture/ Procure Kit
FCB
Logistics
PD/003 Certification
Distribution
Installation
TM Updates Supply Stock
Ship ILS Update
Feedback Report to Headquarters

ECP PROCESSING PRE-PROPOSAL PHASE

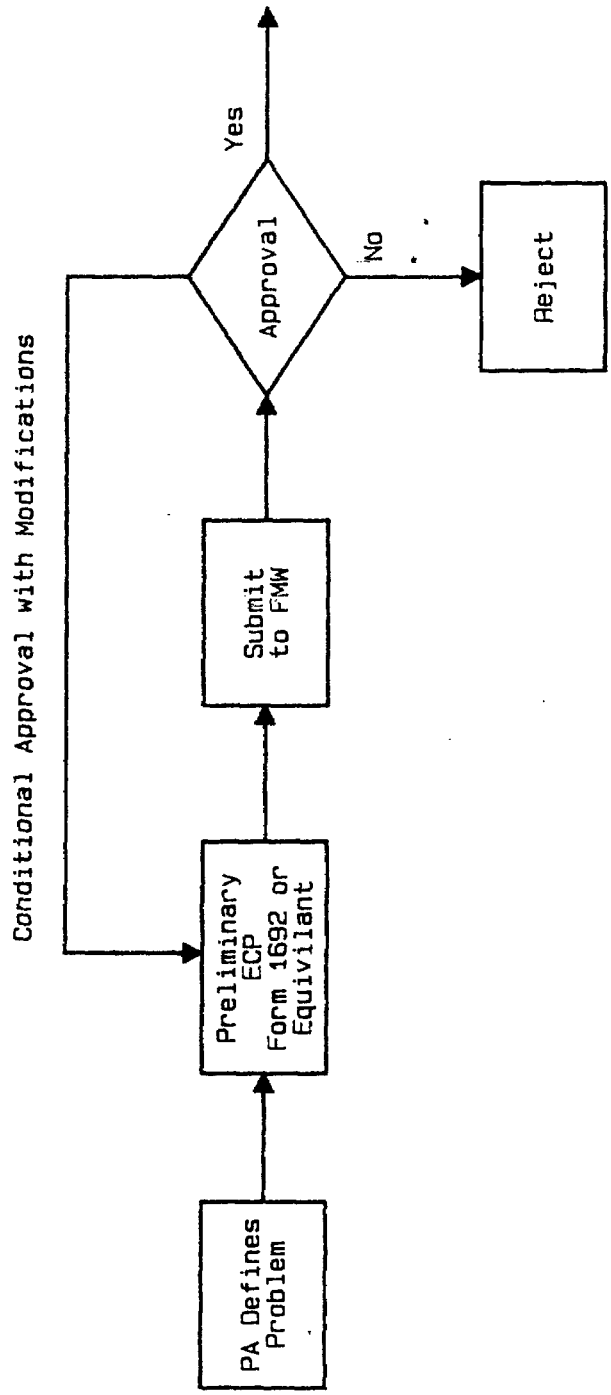

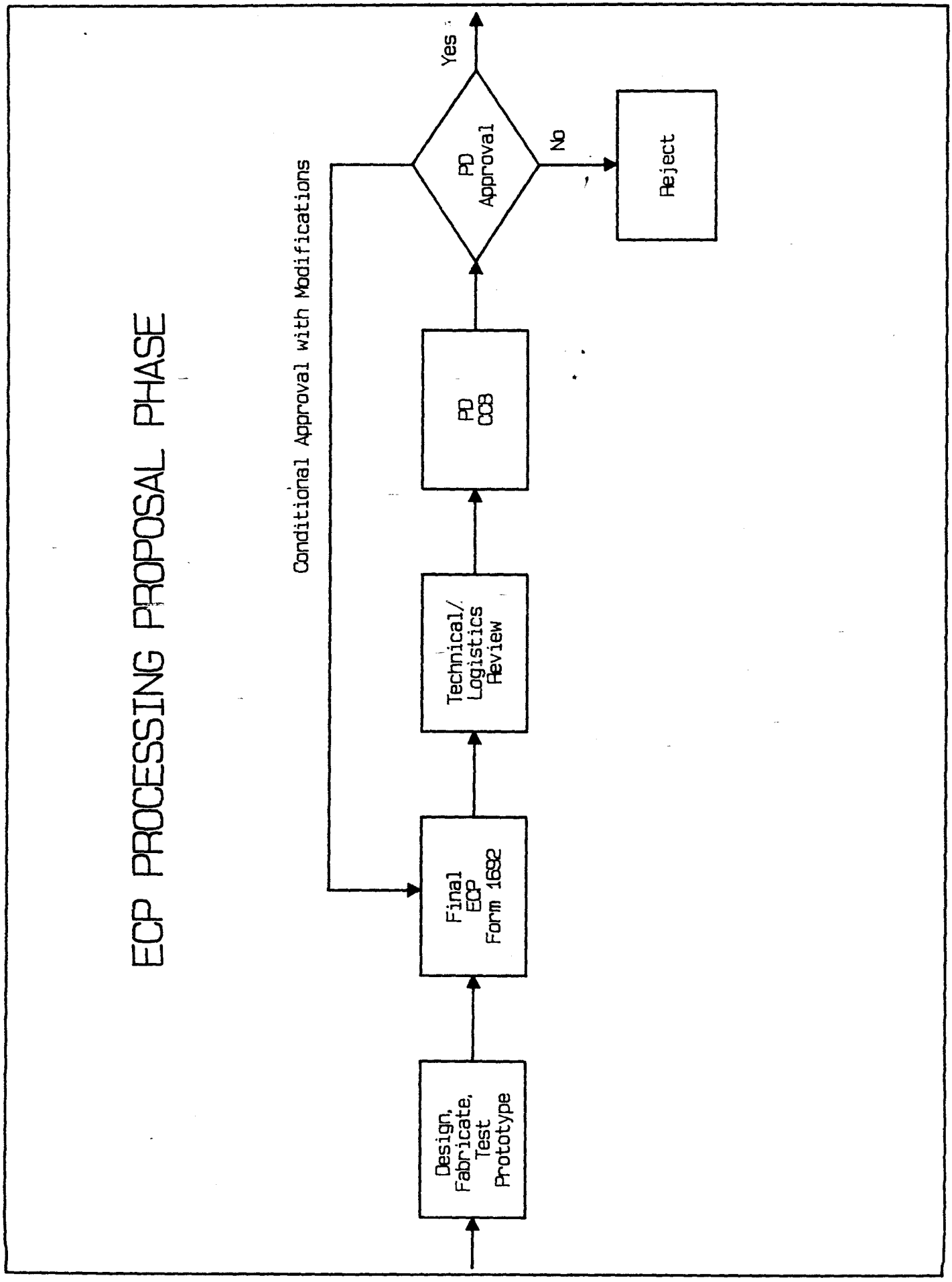
ECP PROCESSING PROPOSAL PHASE
Design, Fabricate, Test Prototype
Final ECP Form 1692
Technical/ Logistics Review
PD CCB
PD Approval
Yes
No
Reject
Conditional Approval with Modifications

ECP PROCESSING PRODUCTION PHASE

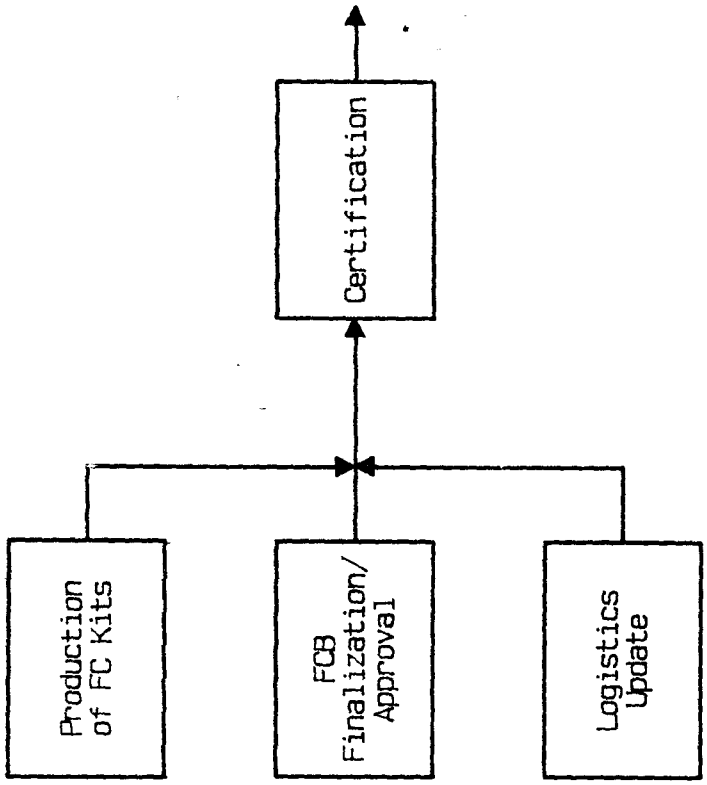

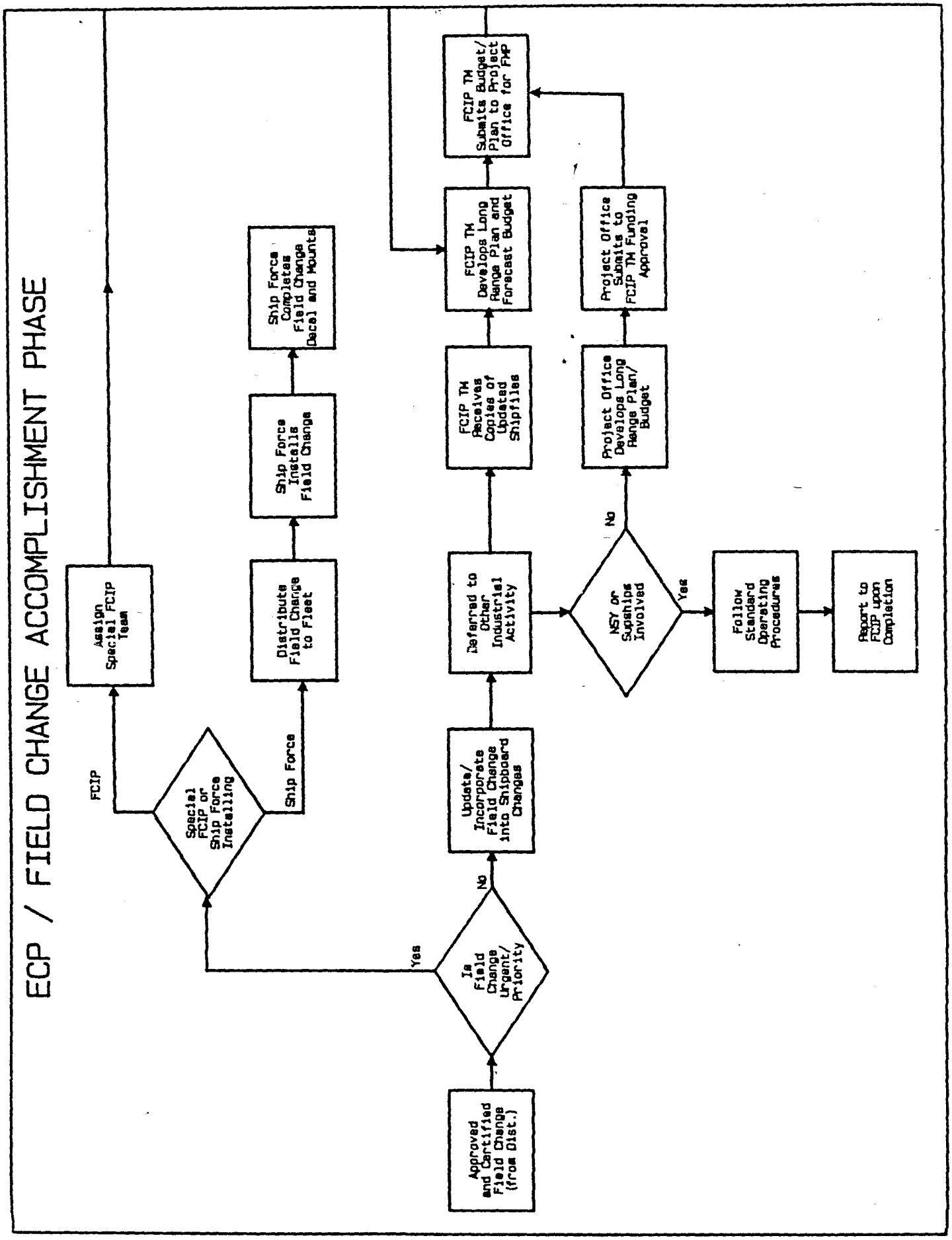
ECP / FIELD CHANGE ACCOMPLISHMENT PHASE
Approved and Certified Field Change (from Dist.)
Is Field Change Urgent/ Priority
Yes
No
Special FCIP or Ship Force Installing
FCIP
Ship Force
Assign Special FCIP Team
Distribute Field Change to Fleet
Ship Force Installs Field Change
Ship Force Completes Field Change Decal and Mounts
Update/ Incorporate Field Change into Shipboard Changes
Deferred to Other Industrial Activity
FCIP TM Receives Copies of Updated Shipfiles
FCIP TM Develops Long Range Plan and Forecast Budget
FCIP TM Submits Budget/ Plan to Project Office for FYP
NSY or Supships Involved
Yes
No
Project Office Develops Long Range Plan/ Budget
Project Office Submits to FCIP TM Funding Approval
Follow Standard Operating Procedures
Report to FCIP upon Completion

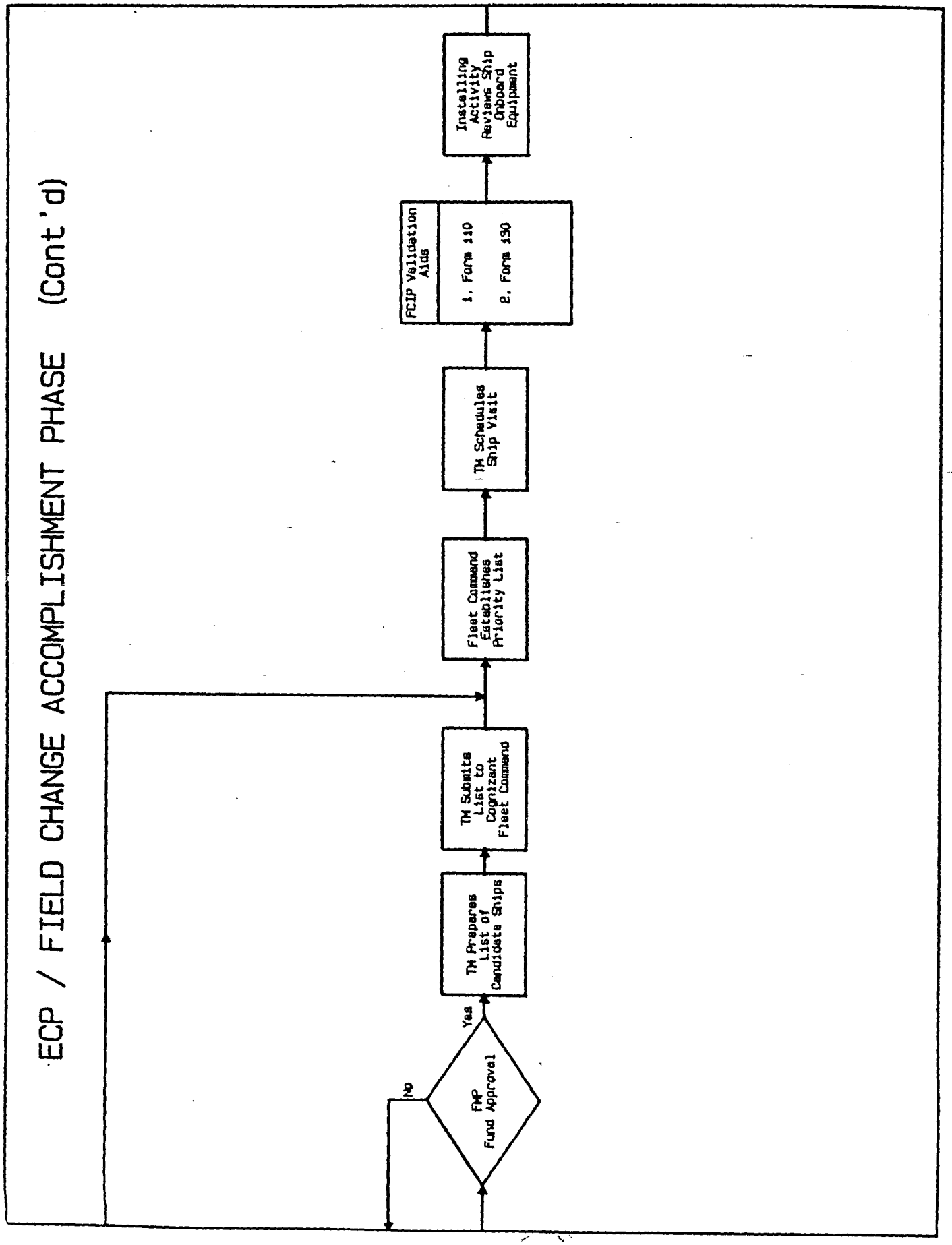
ECP / FIELD CHANGE ACCOMPLISHMENT PHASE (Cont'd)
FMP Fund Approval
Yes
No
TM Prepares List of Candidate Ships
TM Submits List to Cognizant Fleet Command
Fleet Command Establishes Priority List
TM Schedules Ship Visit
FCIP Validation Aids
1. Form 110
2. Form 190
Installing Activity Reviews Ship Onboard Equipment

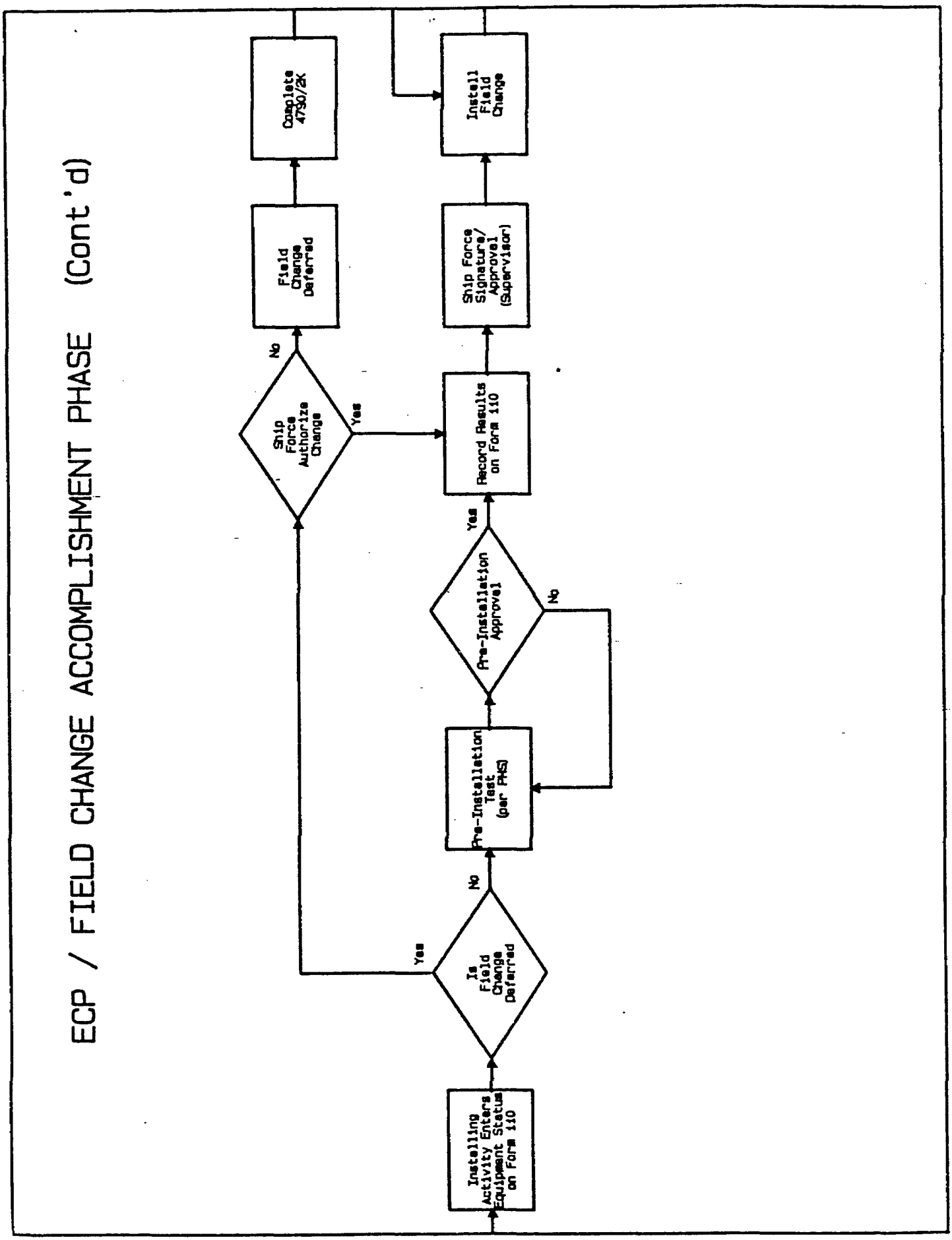
ECP / FIELD CHANGE ACCOMPLISHMENT PHASE (Cont'd)
Installing Activity Enters Equipment Status on Form 110
Is Field Change Deferred
Yes
No
Pre-Installation Test (per PMS)
Pre-Installation Approval
Yes
No
Record Results on Form 110
Ship Force Signature/ Approval (Supervisor)
Install Field Change
Ship Force Authorize Change
No
Yes
Field Change Deferred
Complete 4790/2K

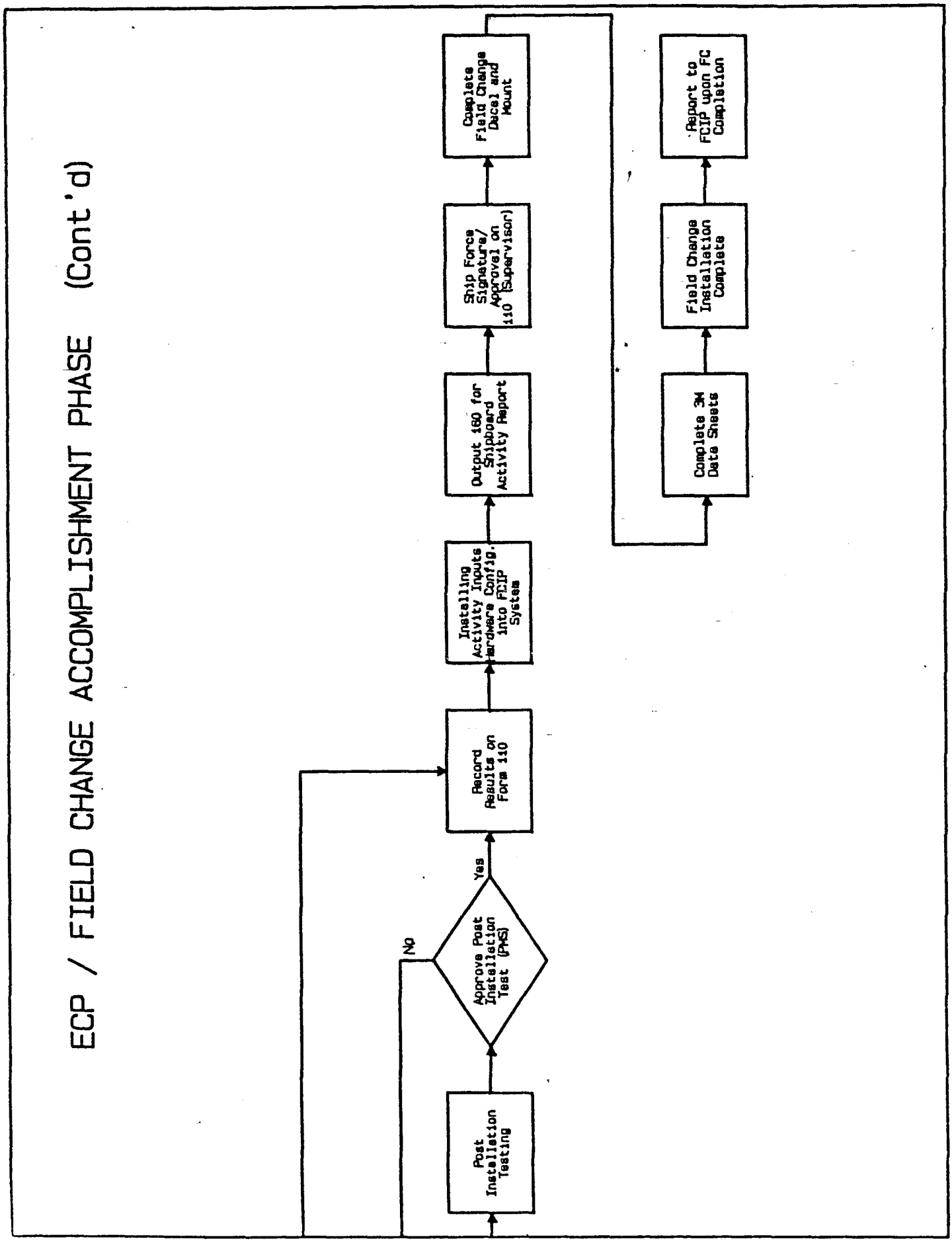
ECP / FIELD CHANGE ACCOMPLISHMENT PHASE (Cont'd)
Post Installation Testing
Approve Post Installation Test (PMS)
No
Yes
Record Results on Form 110
Installing Activity Inputs Hardware Config. into FCIP System
Output 160 for Shipboard Activity Report
Ship Force Signature/ Approval on 110 (Supervisor)
Complete Field Change Decal and Mount
Complete 3M Data Sheets
Field Change Installation Complete
Report to FCIP upon FC Completion

APPENDIX E

CONFIGURATION CONTROL BOARD

CHANGE REQUEST/DIRECTIVES INSTRUCTIONS

THIS PAGE INTENTIONALLY LEFT BLANK

Appendix E

INSTRUCTIONS FOR PREPARATION OF CCB CHANGE REQUEST/DIRECTIVES

1. This exhibit provides instructions for preparing CCB Change Request/Directives, SPAWAR Form 4130/17 (3-88). A CCB Change Request/Directive shall be prepared and processed for all Class I Engineering Change Proposals and Requests for Major/Critical Deviations and Waivers to be presented to SPAWAR CCBs.

2. SPAWAR Form 4130/17 (3-88) shall be prepared as follows:

CLASSIFICATION: If the Change Request/Directive contains classified information, include the proper security classification at top and bottom of the form with appropriate instructions for automatic, time-phased downgrading and declassification at the top. Same applies to supplements and/or attachments. Mark each item on a classified Change Request/Directive to indicate classification of the particular item (i.e., (S), (C), or (U)).

BLOCK 1. PROCESSING RATE: The originator shall place an "X" in the applicable box to indicate the relative speed at which the change is to be processed.

a. "Hand-Carry" shall be used for "Emergency" ECPs or other very high priority changes. The sponsor must obtain authorization to process via the "Hand-Carry" procedures. Processing must be completed within two working days.

b. "Priority" should be used for "Urgent" ECPs, "Safety" changes or to meet production cut-in dates, etc. Processing should be completed within 15 calendar days.

c. "Normal" applies to "Routine" ECPs, and Requests for Deviations and Waivers. Processing should be completed within forty-five calendar days whenever possible.

BLOCK 2. CONTRACTOR/NAVY ACTIVITY: Insert contractor's name, city, and state or Navy activity that originated the ECP or Request for Deviation or Waiver.

BLOCK 3. ECP CATEGORY: Indicate the category of ECP (Hardware, Firmware, Software, Hardware/Software) by placing an "X" in the applicable box.

BLOCK 4. ECP NUMBER: Enter the number assigned by the contractor or Navy activity.

Appendix E

BLOCK 5. CCB NUMBER: Inserted by the PMW after ECP has been entered into ECP Tracking System and CCB number has been assigned.

BLOCK 6. CONFIGURATION ITEM NOMENCLATURE: Enter the Government assigned name and type designation nomenclature, if applicable, or the authorized name of the Configuration Item(s) affected by the ECP.

BLOCK 7. ORIGINATOR OF CHANGE REQUEST: Enter full name of the person originating the Change Request/Directive.

BLOCK 8. ORIGINATOR CODE: Self-explanatory.

BLOCK 9. ORIGINATOR EXTENSION: Self-explanatory (if field activity, include autovon number).

BLOCK 10. DATE CCB REQUEST PREPARED: Self-explanatory.

BLOCK 11. TITLE OF CHANGE: Enter a brief descriptive title indicating the purpose of the ECP.

BLOCK 12. DESCRIPTION/JUSTIFICATION/RECOMMENDED SOLUTION:

a. Description: Being as concise as possible, indicate one or more of the following:

(1) Correction of deficiency (Government or contractor Responsible)
(2) Safety (requires Safety Officer concurrence, and "SAFETY" stamp with code and initials required)
(3) Interface (Complete Block 29, if applicable)
(4) Compatibility
(5) Operational Requirement
(6) Operational or Logistics Support Improvement
(7) Cost Reduction
(8) Value Engineering
(9) Production Stoppage
(10) Reliability and Maintainability
(11) Administrative/New Source
(12) Master Government Furnished Equipment List (MGFEL)
(13) Interservice Requirement

Where space is not adequate, supplemental drawings and sketches shall be provided to the extent necessary to clearly portray the proposed change. If the proposed change is an interim solution, it shall be so stated.

b. Justification/Recommended Solution: When known or whenever practicable, the justification for a change should include a quantitative expression of the problem and the benefit(s) expected if the proposed change is approved or incorporated. This can be done by citing the number of failures and/or frequency of the problem; Mean-Time-Between-Failure (MTBF), Mean-Time-Between-Removal (MTBR), Mean-Time-Between-Overhaul (MTBO), etc., Maintenance and Material Management (3-M) data and, if required, quantify any testing done. A life-cycle analysis should be used to determine these factors. The justification must establish the need. The following information is essential where applicable.

(1) Indicate the existing operational or military necessity, and include in the references the identification of the request. On Fleet requests, give the comments of the highest endorsing authority.

(2) For "Safety" changes, include risk assessment (i.e., hazard severity (Category 1 - catastrophic, or Category II - critical) and hazard probability (A- continual, B- frequent, C- likely to occur sometime during the life of the item)). Support the risk assessment with information from pertinent Quality Discrepancy Reports, Casualty Reports (CASREPs) and/or statistical data. Indicate whether this is the only action being taken on this problem or whether follow-on action is also required.

NOTE: Whenever Field Change categories of "Emergency" or "Urgent" are recommended, they must be fully justified in this block.

(3) What investigation of the problem has been conducted? Indicate steps taken to ensure earliest possible incorporation and delivery of the required change, and interim measures which are in effect until the change is incorporated and delivered, and provide an explanation of the direct results which can be expected if the change is not made. Indicate whether the delivery schedule included in the ECP is acceptable, and if not, what steps have been taken to obtain improvements (e.g., limiting the scope of the change, proposals for alternate corrections, etc.).

(4) Include under "justification" one of the following statements as appropriate with respect to effect on guarantees:

(a) This is an improvement change.

(b) This is an improvement change for which the contractor assumes responsibility in accordance with (state reference in which the contractor says this).

(c) This change is required to correct a defect in (state the kind of defect (i.e., material or workmanship)) for which the contractor assumes responsibility in accordance with (state reference in which the contractor says this).

(d) This change is required to correct a failure to meet (state kind of failure (i.e., contract specification, or some other specific contractual requirement)) for which the contractor assumes responsibility in accordance with (state reference in which the contractor says this).

(e) The change is required to correct a defect in (state kind of defect (i.e., material or workmanship)) for which the contractor does not assume responsibility. The reason(s) for determining the defect is (are) as follows (state reason(s)).

(f) This change is required to correct a failure to meet (state kind of failure (i.e., contract specifications, or some other specific contractual requirement)). The contractor does not assume the responsibility. The reason(s) for determining the defect is (are) as follows: (state reason(s)).

(g) Foreign Military Sales (FMS) case numbers shall also be entered in this section when applicable.

BLOCK 13. REFERENCES: When SPAWAR has requested an ECP, reference (a) shall be the correspondent that requested the ECP. Include the serial number and date of the contractor's or field activity's transmittal letter(s) and the serial number and the date of the local Government representative's endorsement(s). List pertinent correspondence from the Fleet Commands for operating activities as well as reports or studies. For CCB actions involving OCDNs, cite the source and date of notification to the contractor which identified the defect or failure to conform. Include related ECPs, that is, those component changes that are being processed concurrently. List applicable Test & Evaluation results and authorization for fleet installation where applicable.

BLOCK 14. CONTRACT NUMBERS:

a. Intent: To identify active contracts, a Basic Ordering Agreement (BOA) or other procurement documents against which elements of the change can be implemented.

b. Instructions:

(1) List active contract numbers under which items are being delivered and against which a change order can be issued by the contracting officer, to authorize the change in production and order related items/services to be provided by the Contractor. Include contracts for applicable FMS if SPAWAR is responsible for ordering the change into production.

or

(2) List a current BOA number under which requiring activities can order from contractor field change kits, Field Change Bulletins or other services required to implement the change in out-of-production items.

(3) List Procurement Request if new procurement; MIPR if procuring via Army/Air Force; Task/Project Order/Work Request or Authorization for Contractual Procurement if implementing via Field Activity.

BLOCK 15. ARTICLES AFFECTED:

a. Intent: To identify equipment affected or software by the change.

b. Instructions: List the Type/Model/Series of equipment or nomenclature of component, or software version affected by the changes.

BLOCK 16. QUANTITIES OF ARTICLES:

a. Intent: To identify the total population of items affected by the change and to show the estimated quantities of articles to be changed in production and by field change.

b. Instructions:

(1) For active production contracts entered in Block 14, list quantity of items on contract by individual contract, followed by estimated quantities to be changed in production and by field change installation.

(2) For BOAs listed in Block 14, list total items to be changed under "Field Change".

(3) For other procurement documents (Procurement Requests (PRs), MIPRs, etc.), list applicable quantities to be changed in production or by field change.

BLOCK 17. APPN CODE: Self-explanatory.

BLOCK 18. FISCAL YEAR: Self-explanatory.

BLOCK 19. COST: Enter total cost from the ECP, broken out by appropriation and fiscal year, i.e., a part of the ECP may be funded by O&MN and a part may be funded by OPN.

BLOCK 20. PRODUCTION EFFECTIVITY: If the change has been started in production, cite the appropriate serial numbers (e.g., SNs B25 through B250) where the change can be made during production.

BLOCK 21. FIELD CHANGE EFFECTIVITY: Cite the appropriate serial numbers and field change effectivity.

BLOCK 22. COST SAVINGS/HARD SAVINGS: If there are cost savings aspects to the change, the type and amount of the savings shall be indicated as applicable. Best estimates will suffice in the absence of any reasonably obtainable facts. For the purpose of this instruction, the following definitions apply:

a. Hard savings: Savings that can be substantiated within reason and that pertain to currently allocated or programmed funds.

b. Intangible: Because of variables, peculiarities, unpredictables, etc., the savings cannot reasonably be established.

BLOCK 23. SHIP/VEHICLE CLASS AFFECTED: When the delivered Configuration Item is installed in one or more ship/vehicle class, enter the identification of such classes.

BLOCK 24. LOCATIONS OR SHIP/VEHICLE NUMBERS AFFECTED: State the location(s) at which the field change is to be accomplished. If the field change is to be accomplished in ships (or in vehicles for which the serial numbers are not shown), enter the ship hull numbers (or vehicle numbers).

BLOCK 25. FMS EFFECTIVITY: Record any FMS effectivity by checking:

a. Yes: Indicate case number involved, and any other related information.

b. No: No buys in FMS.

BLOCK 26. TRAINING EFFECTIVITY: Training effectivities which have been specified in the approved system specification, including any changes or effects on the operability of the system. Indicate by checking "Yes" or "No" to the following questions:

a. If applicable, has proposed change been coordinated with Chief of Naval Education and Training (CNET)?

b. Will approved change be incorporated in maintenance and training equipment?

c. Will approved change be implemented in operational training equipment?

BLOCK 27. FIELD CHANGE TYPE: The importance and urgency of accomplishing FCs shall be indicated: Emergency, Urgent, or Routine.

BLOCK 28. FIELD CHANGE KIT DELIVERY LEAD TIME: Enter from the ECP the estimated number of months after authorization to proceed, that the first kit(s) will be delivered.

BLOCK 29. INTERFACE: The originator of the CCB Change Request/Directive shall determine whether or not other systems, subsystems, equipments or facilities are affected by the change. If none, enter the word "None". Otherwise, briefly identify areas affected, indicating in the justification the impact of the change, what action has been/is being taken and by whom, and the time-phasing of the related action(s). Interrelated CCB actions should be cross-referenced by CCB number when assigned. The following shall be considered as potential interface problem areas:

a. Electronic Test Equipment (ETE); all test and maintenance support equipment including General Purpose Electronic Test Equipment (GPETE), Special Purpose Electronic Test Equipment (SPETE), Automatic Test Equipment (ATE), manual testing equipment and related test program/software sets.

b. Ship installation, communication, navigation aids, etc.

c. Changes to electronic equipment, Contractor Furnished Equipment (CFE) or Government Furnished Equipment (GFE), which will be required as a result of this change.

d. Interfaces and associated documentation identified elsewhere on the CCB Change Request/Directive must be explained in this Block.

e. Tactical computer programs.

BLOCK 30. WSA&E CONCURRENCE: If a proposed change affects an existing, approved Warfare Systems Controlled Interface Drawing (WSCID) or a Warfare Systems Performance Specification (WSPS), the cognizant PMW must coordinate with and receive concurrence from the SPAWAR Warfare Systems Architecture and Engineering (WSA&E) Division.

BLOCK 31. LOGISTICS CONSIDERATIONS/IMPLEMENTING ACTIONS: Place an "X" immediately to the left of each item affected. After an ECP has been approved, the CCB Chairman will assign action(s) to be taken, by whom, and dates by which the items are to be completed. This information should be entered into the ECP Tracking System immediately after the CCB.

BLOCK 32. RETROFIT/FIELD CHANGE CONSIDERATIONS: Place an "X" in the appropriate boxes and fill in the Cognizant Activity and Target Date.

BLOCK 33. PMW TECHNICAL REVIEW: Signature indicating that technical review of the proposed change has been completed.

BLOCK 34. CCB PARTICIPATING MEMBERS: Each member of the CCB shall initial under appropriate "Recommended Action".

BLOCK 35. PD CCB CHAIRMAN: To be signed by the PD CCB Chairman upon completion of CCB.

BLOCK 36. DATE CCB ACTION: The CCB Secretariat shall insert the date of CCB action.

BLOCK 37. CCB ACTION: The CCB Secretariat will check applicable blocks concerning the action taken by the CCB. Reschedule dates will be recorded in the appropriate space provided.

BLOCK 38. DISTRIBUTION: Self-explanatory, add to distribution, as necessary.

SPAWAR CONFIGURATION CONTROL BOARD (CCB) REQUEST/DIRECTIVE

1. PROCESSING RATE: ☐ HAND CARRY ☐ PRIORITY ☐ NORMAL

2. CONTRACTOR/NAVY ACTIVITY:

3. ECP CATEGORY: ☐ FIRMWARE ☐ SOFTWARE ☐ HARDWARE ☐ HARDWARE/SOFTWARE

4. ECP NUMBER:

5. CCB NUMBER:

6. CONFIGURATION ITEM NOMENCLATURE:

7. ORIGINATOR OF CHANGE REQUEST:

8. ORIG. CODE:

9. ORIG. EXTENSION:

10. DATE CCB REQUEST PREPARED:

11. TITLE OF CHANGE:

12. DESCRIPTION/JUSTIFICATION/RECOMMENDED SOLUTION:

(USE CONTINUATION PAGE, IF REQUIRED)

13. REFERENCES:

14. CONTRACT NUMBERS: (PRs, MIPRs, PROJECT ORDERS, etc.)	15. ARTICLES AFFECTED: (TYPE, SERIES, etc.)	16. QUANTITIES OF ARTICLES:		
		TOTAL ON CONTR	PRODUCTION	FIELD CHANGE

17. APPN CODE	18. FY	19. COST	20. PRODUCTION EFFECTIVITY		21. FIELD CHANGE EFFECTIVITY		
			FROM	TO	FROM	TO	FLD. CHANGE BY
			22. COST SAVINGS		HARD SAVINGS		
			☐ NO		☐ $		☐ INTANGIBLE

23. SHIP/VEHICLE CLASS AFFECTED:

24. LOCATIONS OR SHIP/VEHICLE NUMBERS AFFECTED:

25. FMS EFFECTIVITY: ☐ YES ☐ NO EXPLAIN:

27. FIELD CHANGE TYPE: ☐ EMERGENCY ☐ URGENT ☐ ROUTINE

28. FIELD CHANGE KIT DELIVERY LEAD TIME: (MONTHS AFTER AUTHORIZATION TO PROCEED)

26. TRAINING EFFECTIVITY

A. IF APPLICABLE, HAS PROPOSED CHANGE BEEN COORDINATED WITH CNET?

☐ YES ☐ NO

B. WILL APPROVED CHANGE BE INCORPORATED IN MAINTENANCE AND TRAINING EQUIPMENT?

☐ YES ☐ NO

C. WILL APPROVED CHANGE BE IMPLEMENTED IN OPERATIONAL TRAINING EQUIPMENT?

☐ YES ☐ NO

29. INTERFACES (IDENTIFY OTHER SYSTEMS/EQUIPMENT THAT MUST BE CHANGED):

30. NSAAE CONCURRENCE:

(Code) (Signature) (Date)

SPAWAR 4130/17 (3-88) (SEE REVERSE) PAGE 1 OF 2 PAGES

31. LOGISTICS CONSIDERATIONS/ IMPLEMENTING ACTIONS:	COGNIZANT ACTIVITY	TARGET DATE
1. SUPPLY SUPPORT		
A. PTD UPDATE		
B. REVISE APLs		
C. PSD SHEETS SUBMISSION		
2. TECHNICAL MANUALS		
A. PREPARE CHANGE PAGES		
B. INCLUDE IN TM UPDATE		
C. TMIN NUMBER ASSIGNMENT		
3. TRAINING		
A. NTP REVISIONS		
B. MODIFY/PROVIDE DEVICES		
C. CURRICULUM REVISION		
4. MAINTENANCE/Depot		
A. TRS REVISIONS		
B. REVISE TPSs		
C. UPGRADE JIGS/FIXTURES		
D. PMS REVISION		

	COGNIZANT ACTIVITY	TARGET DATE
5. ILS DOCUMENTATION		
A. ILSP REVISION		
B. OLSS REVISION		
C. MAINTENANCE PLAN REVISION		
D. DRAWINGS UPDATE/REVISION		
E. SPECIFICATION REVISION		
F. ATP UPDATE/REVISION		
6. NOMENCLATURE		
A. DD81 SUBMISSION		
7. COMPUTER RESOURCES		
A. SOFTWARE SPECS. REVISION		
B. SOFTWARE CHANGE INSTALL		
8. ADMINISTRATIVE		
A. CONTRACT MODIFICATION		
B. WORK REQUEST/TASK		
C. APPROVAL LETTER		
D. DISAPPROVAL LETTER		
9. OTHER		
A.		
B.		
C.		
D.		

32. RETROFIT/FIELD CHANGE CONSIDERATIONS:

	YES	NO
1. Retrofit Required?		
a. Field Change Kit?		
b. EIB FC Article?		
2. Total Inventory Objective Quantity: _____		

REQUIRED ACTIONS:	COGNIZANT ACTIVITY	TARGET DATE
A. EIB FC ARTICLE		
B. OBTAIN FUNDING		
C. PROCURE FC		
D. FIELD CHANGE BULLETIN		
E. FC NUMBER ASSIGNED		
F. FC AVAILABILITY EIB		
G. FC NSN		
H. INSTALLATION COST BREAKDOWN		
I. INSTALLING ACTIVITY		

33. PMW TECHNICAL REVIEW:

34. CCB PARTICIPATING MEMBERS:	RECOMMENDED ACTION		
	APPROVED	DISAPPROVED	DEFERRED
ENGINEER OR DESIGNATED REPRESENTATIVE			
PMW OR DESIGNATED REPRESENTATIVE			
PROGRAM ILS MANAGER			
FC COORDINATOR (003)			
VALUE ENGINEERING PROGRAM ADMINISTRATOR (VECPs ONLY)			
SYSTEM SAFETY OFFICER (003)			
PD/PMW FINANCIAL MANAGER			
SPAWAR 003 CM COORDINATOR			
CONTRACT ADMINISTRATOR (12)			
OTHER PROGRAM/COMMAND/SERVICE REPRESENTATIVE			

35. PD CCB CHAIRMAN:

36. DATE CCB ACTION:

37. CCB ACTION:

☐ APPROVED

☐ DISAPPROVED

☐ DEFERRED

RESCHEDULE DATES:

38. DISTRIBUTION: SPCC
SPAWARDETMECH
EACH CCB MEMBER
SPAWAR 003-CM

SPAWAR 4130/17 (3-88) PAGE 2 OF 2 PAGES

SPAWAR

ELECTRONIC FIELD CHANGE BULLETIN

FIELD CHANGE NUMBER: _____

TMINS NUMBER: _____

TITLE: _____

_____

_____

DATE: _____

TMIN NO:

TABLE OF CONTENTS

SECTION	TITLE	PAGE
1.0	PLANNING DATA	
1.1	TITLE	
1.2	IMPACT SUMMARY	
	• TYPE	
	• ESTIMATED MANHOURS	
	• CLASSIFICATION WARNING	
	• ACCOMPLISHMENT PRIORITY	
	• EQUIPMENT IMPACT (NOMENCLATURE/SERIAL RANGES)	
	• SITE/HULL APPLICABILITY	
1.3	DISTRIBUTION STATEMENT	
1.4	PURPOSE	
1.5	PREREQUISITE FIELD CHANGES	
1.6	EFFECT ON NOMENCLATURE	
1.7	INDICATION OF ACCOMPLISHMENT	
1.8	ACCOMPLISHMENT PLAN	
1.9	PROPOSED INSTALLATION/AVAILABILITY PLAN	
2.0	KIT DESCRIPTION	
2.1	LIST OF HARDWARE	
2.2	LIST OF TOOLS AND TEST EQUIPMENT	
2.3	SOFTWARE PROVIDED	
2.4	DOCUMENTATION PROVIDED	
3.0	ACCOMPLISHMENT	
3.1	PRE-INSTALLATION TEST PROCEDURES	
3.2	INSTALLATION PROCEDURES	
3.3	POST-INSTALLATION TEST PROCEDURES	
3.4	DOCUMENTATION IMPACT	
3.5	REPORT OF ACCOMPLISHMENT	
3.6	DISPOSITION OF REPLACED UNITS/MATERIAL	
4.0	SPARES IMPACT	
4.1	ONBOARD REPAIR PARTS (HULLS)	
	APPENDIX	

Date: Page of

TMIN No:

SPAWARSYSCOM (TMIN) FIELD CHANGE BULLETING NO: FC -

ELECTRONIC FIELD CHANGE BULLETIN
SPACE & NAVAL WARFARE SYSTEMS COMMAND
DEPARTMENT OF THE NAVY
WASHINGTON, D.C. 20363

PREPARED BY: CONTRACT NO.

PROJECT NO. ECP NO.

1.0 PLANNING DATA

1.1 TITLE: _____

1.2 IMPACT SUMMARY:

TYPE: _____ OPERATIONAL CHANGE: _____

CLASS: _____ NON-OPERATIONAL CHANGE: _____

ESTIMATED MANHOURS PRETEST: _____ INSTALLATION: _____
POST TEST: _____

CLASSIFICATION WARNING:

ACCOMPLISHMENT PRIORITY:

EQUIPMENT IMPACT: (Nomenclature/serial range)

SITE/HULL APPLICABILITY:

1.3 FIELD CHANGE AUTHORIZATION AND ACCOMPLISHMENT:

THIS FIELD CHANGE HAS BEEN AUTHORIZED BY SPAWARSYSCOM CONFIGURATION CHANGE CONTROL BOARD (CCB) DIRECTIVE NO. _____ OF _____ INSTALLATION OF THIS FIELD CHANGE WILL BE PERFORMED BY _____ IN COORDINATION WITH SHIP/SHORE SITES AND THEIR TYCOMs.

Date: Page of

TMIN NO:

1.4 PURPOSE:

1.5 PREREQUISITE FIELD CHANGES:

1.6 EFFECT ON NOMENCLATURE:

1.7 ACCOMPLISHMENT:

FIELD CHANGE STATUS				
1	2	3	4	5
6	7	8	9	10
11	12	13	14	15
16	17	18	19	20
21	22	23	24	25
26	27	28	29	30
31	32	33	34	35
36	37	38	39	40

WHEN THE MODIFICATION HAS BEEN ACCOMPLISHED, MARK THE EQUIPMENT MODIFICATION PLATE (SAMPLE SHOWN ABOVE) AS FOLLOWS:

DISPOSITION OF FIELD CHANGE BULLETINS: MAINTENANCE SUPPORT ACTIVITIES SHALL MAINTAIN A LIBRARY COPY OF THIS FIELD CHANGE BULLETIN. HOLDERS OF EQUIPMENT SHALL NOT DESTROY THIS FIELD CHANGE BULLETIN UNTIL THE FIELD CHANGE HAS BEEN ACCOMPLISHED. THE EQUIPMENT TESTED, AND THE APPLICABLE MANUALS, DRAWINGS, CHARTS, AND IDENTIFICATION PLATES HAVE BEEN CORRECTED AND REPLACED.

Date: Page of

TMIN NO:

1.8 ACCOMPLISHMENT PLAN:

1.9 KIT AVAILABILITY PLAN:

Date: Page of

TMIN NO:

2.0 KIT DESCRIPTION					
2.1 LIST OF PARTS AND MATERIALS PER KIT NONE: _____					
ITEM NO.	DESCRIPTION	PART NUMBER/ STOCK NUMBER	QTY	PROVIDED	
				YES	NO

Date: Page of

TMIN NO:

2.2 LIST OF TOOLS AND TEST EQUIPMENT REQUIRED: NONE:___					
ITEM NO.	NOMENCLATURE	IDENTIFICATION NUMBER	QTY	PROVIDED	
				YES	NO

Date: Page of

TMIN NO:

2.3 SOFTWARE PROVIDED: NONE: _____

DESCRIPTION	CLASS				MAT NO.	QUANTITY BY SITE				
		TAPE MO.	LEVEL	PART NO.						

Date:

Page of

TMIN NO:

2.4 DOCUMENTATION PROVIDED: NONE: _____

SSM	TM	TPP	OTHER	SHORT TITLE	NUMBER	CLASS	CHG NO.	QTY BY SITE			
								CDR	HULL	TTF	TRF

Date:

Page of

TMIN NO:

3.1 PRE-INSTALLATION TEST PROCEDURES: NOTE: OBSERVE ALL SAFETY PRECAUTIONS	
CHECK	STEP NUMBER

Date: Page of

TMIN NO:

3.2 INSTALLATION PROCEDURES: NOTE: OBSERVE ALL SAFETY PRECAUTIONS	
CHECK	STEP NUMBER

Date: Page of

TMIN NO:

3.3 POST-INSTALLATION TEST PROCEDURES: NOTE: OBSERVE ALL SAFETY PRECAUTIONS	
CHECK	STEP NUMBER

Date: Page of

TMIN NO:

3.4 DOCUMENTATION IMPACT: NONE: _____

TYPE									SHORT TITLE	NUMBER	CLASS
SSM	TM	MP	MRP	MIP	MRC	APL	TPP	OTHER			

TMIN NO:

3.5 REPORT OF ACCOMPLISHMENT: PERSONNEL ACCOMPLISHING THIS CHANGE SHALL REPORT ITS COMPLETION BY COMPLETING A COPY OF THE SHIP'S CONFIGURATION CHANGE FORM (OPNAVINST 4790/CK) IN ACCORDANCE WITH VOLUME II OF THE SHIP'S 3-M MANUAL (OPNAVINST 4790.4 SERIES)
3.6 DISPOSITION OF REPLACED UNITS/MATERIAL:

Date:

Page of

TMIN NO:

4.0 SPARES IMPACT	
4.1 SPARES MODIFICATION	
CHECK	STEP NUMBER

Date: Page of

TMIN NO:

4.2 ONBOARD REPAIR PARTS (HULLS)				NO IMPACT: _____			
DESCRIPTION	PART NUMBER		NAVY STOCK NUMBER		ACTION		
	OLD	NEW	OLD	NEW	MOD	ADD	DEL

APPENDIX G

FIELD CHANGE INSTALLATION PROGRAM FORMS

FCIP110
SHIP UIC:

NAVELEX FIELD CHANGE INSTALLATION PROJECT
EQUIPMENT VERIFICATION/FIELD CHANGE STATUS RECORD FOR THE
USS

PAGE: 1

EQUIPMENT DESIGNATION: AN/SRA-56 _____ EIC CODE: 3933 SERIAL NO: A89 _____ LOCATION: _____

CONTRACT NO: _____ MFGR (FSCM): _____ SECAS ID #: _____ TOTAL MAN-HRS EXPENDED ON THIS EQUIPMENT: _____

FC #	01	02	03	04	05	06	07	08	09	10	11	12	13	14	15	16	17	18	19	20	21	22	23	24	25
SECAS STATUS	E	E																							
FCIP STATUS																									
INST MAN-HRS																									

NEW EQUIPMENT

FC #	26	27	28	29	30	31	32	33	34	35	36	37	38	39	40	41	42	43	44	45	46	47	48	49	50
SECAS STATUS																									
FCIP STATUS																									
INST MAN-HRS																									

EQUIPMENT DELETED

DECAL

FIELD CHANGE STATUS CODES:
X - INSTALLED
O - APPLICABLE NOT INSTALLED
E - INSTALLED BY FCIP
N - NOT APPLICABLE
V - CANNOT VERIFY
1 - DEFERRED, BEYOND SCOPE OF FCIP
2 - DEFERRED, EQUIPMENT NOT AVAILABLE
3 - DEFERRED, MATERIAL NOT AVAILABLE
R - CANCELLED

PRE/POST INSTALLATION TEST

	PRE	POST
OPERATIONAL		
NONOPERATIONAL		
MAN HOURS		

NOTES: _____

PRE INSTALLATION TEST POST INSTALLATION TEST

SIGN: _____ _____

RATE: _____ _____

FIELD CHANGES INSTALLED BY: _____ _____

I AM AWARE THAT THIS EQUIPMENT IS INOPERATIVE AND GIVE THE F.C. INSTALLATION TEAM PERMISSION TO INSTALL THE REQUIRED FC'S - NO POST INSTALLATION TEST REQUIRED

_____
Signature position/title or equivalent showing persons authority level in the ship's organization.

SAMPLE FCIP FORM 110

FCIP130
SHIP UIC: 05119

NAVELEX FIELD CHANGE INSTALLATION PROGRAM
TECHNICAL DOCUMENTATION WORK SHEET FOR THE
USS JOHN MARSHALL SSN 611

REPORT DATE: 06/30/86

PRIMARY EQUIPMENT:

MANUAL DESIGNATION / CHANGE DESIGNATION	**ISSUE** NO.	DATE	MANUAL TITLE / REMARKS

EQUIPMENT:	SERIAL NO:	LOCATION:
AM-2123A(V)/U	F75	RADRM OPSUL
AN/BLA-2C	NDA1	ESM
AN/BRA-24A	B7	ESC TRUNK
AN/CRT-3B	K9466	ERUL
	K9812	TORP RM
AN/PDR-27J	1065	AMR 2
	1085	AMR 1
AN/PDR-27R	A2666	OPS ML
AN/PDR-66	258	NUC LAB
AN/PDR-70	A219	ERUL
	A54	MSL UL
AN/PRC-96	A941	RADIO
	C0209	RADIO
AN/SRA-12B	742	RADIO
AN/UGC-20A	346	RADIO
AN/UGM-9	A263	RADIO
AN/URA-17	B1313	RADIO
AN/URT-23A(V)	A069	RADRM OPS UL
AN/WLR-1G	A51	ESM
AN/WRR-3B	A1033	RADIO
	A62	RADRM OPSUL
AN/WSC-3(V)1	C163	RADIO
CP-1071/WR	B25	RADIO
CP-1112/PD	A71	NUC LAB
CV-3333/U	D171	RADIO
CY-6816/APX-72	C148	CONTRM OPSUL
E-140N	C175	MSL ML
H-169/U	QTY4	RADIO
HD-732A/UD	B194	AMR 2
	B221	CREW MESS
	B9	AMR U/L
J-2698/UR	C0165	RADRM OPSUL
KY-766/BRT-2	B112	RADIO
MD-855/WRR-7	B16	RADRM OPSUL
ON-143(V)5/USQ	A042	RADIO
PP-4276/PD	B776	NUC LAB
PP-6099A/APX-72	A28	OPS ML

PRIMARY EQUIPMENT:

SAMPLE FCIP FORM 130

FCIP130
SHIP UIC: 05119

NAVELEX FIELD CHANGE INSTALLATION PROGRAM
TECHNICAL DOCUMENTATION WORK SHEET FOR THE
USS JOHN MARSHALL SSN 611

REPORT DATE: 06/30/86

PRIMARY EQUIPMENT:

MANUAL DESIGNATION / CHANGE DESIGNATION	**ISSUE** NO.	DATE	MANUAL TITLE / REMARKS
R-1051B/URR	A4463		RADRM OPSUL
	A4536		RADRM OPSUL
	A5415		RADIO
R-1738/WR	A12		RADRM OPSUL
RM-3C-3	B060		NUC LAB
	B094		AMR 2
RT-859A/APX-72	HRD114		OPS ML
SA-734/SG	751		RADIO
	F10		RADIO
SB-1210/UGQ	565		RADRM OPSUL
TS-1189/PD	32		NUC LAB
TS-1843B/APX	5563		OPS ML
TT-187A/UG	297		RADIO
TT-253/UG	426		RADIO
	460		RADIO

PRIMARY EQUIPMENT:

```
FCIP100                                                    N A V E L E X                                                                  PAGE: 001
* X:OBSOLETE                                          FIELD CHANGE INSTALLATION PROJECT
  O:OBSOLESCENT                                   MASTER SELECTED NAVELEX COG EQUIPMENT LISTING

***        EQUIP-TYPE-DESIG        EQUIP-TYPE   APL/RIC-NO      EIC-CODE   OBSOLETE-IND *          EQUIP-TITLE
 FC-NO            NSN             FC-TYPE      BULL/EIB-NO      MAN-HRS  DEFERRAL-IND            FC-REMARKS

***   AM-1017/SLR                    ECM       52101700  EP     N84C000
     1   5895-00-056-1373        IA     0967-LP-106-9020        2.00    D    DEFERRED-MCRL DISCONTINUED, (N/A EIB-737)          <1>
     2   5895-00-889-7628        IA     0967-LP-106-9030        5.00         ALL S/N-CONVERTS TO "B" (FCBN/EIB-795,853)         <1>

***   AM-1017A/SLR                   ECM       52101700SAEP     N84D000
     1   5895-00-889-7628        IA     0967-LP-106-9030        5.00         ALL S/N-CONVERTS TO "B" (FCBN/EIB-795,853)         <1>

***   AM-1017B/SLR                   ECM       52101702  EP     N84E000

***   AM-1365/URT                    COMM      52136500  EP     QE04000
     1                           IIA    0967-LP-149-6020         .50         S/N 1-306 EXCEPT 303                               <1>

***   AM-2123A(V)/U                  COMM      SEE PUB 09       QM03000
     1   NEEO NORVA              IIA    EIB-907                 2.00         ALL S/N (EIB-907)                                  <1>

***   AM-2289/FSA-17                 COMM                       QC38
     1                           IA     9813 7                  1.50         PART "A" S/N 17-36 PART A & B S/N 1-16 (FCB)       <1>

***   AM-3647/FRD-10(V)              ECM                        N91J
     1                                                           .00         NO INFO AVAILABLE                                  <1>
     2                           IIA    0967-LP-141-3060       16.00         ALL S/N (FCIG)                                     <1>
```

SAMPLE FCIP FORM 100

APPENDIX G

```
FCIP150                                  N A V E L E X                                                    PAGE: 001
                                  FIELD CHANGE INSTALLATION PROJECT
                              MASTER SELECTED NAVELEX COG DOCUMENTATION LISTING

     DOCUMENT-DESIG        ISSUE          SU -BY-DESIG        ISSUE PUB-DATE MICRO          DOCUMENT-TITLE/REMARKS
***            DOCUMENT-CHANGE-DESIG      IS UE   APPLIC-FCS   CHG-TYPE CHG-DATE            DOCUMENT-CHANGE-REMARKS

                                 ***********************************************************
                                 *                                                         *
                                 *              EQUIP-TYPE-DESIG: AM-1017/SLR              *
                                 *                                                         *
                                 ***********************************************************

0967-286-9010                                                  690501       TECHNICAL MANUAL                                <T>
                                                                            SUP NS92488 0280-338-3000 0967-106-9010         <1>
***            0967-286-9011                          T-1      710401   EIB-794 DTD 710101                                  <1>

                                 ***********************************************************
                                 *                                                         *
                                 *              EQUIP-TYPE-DESIG: AM-1017A/SLR             *
                                 *                                                         *
                                 ***********************************************************

0967-286-9010                                                  690501       TECHNICAL MANUAL                                <T>
                                                                            SUP NS92488 0280-338-3000 0967-106-9010         <1>
***            0967-286-9011                          T-1      710401   EIB-794 DTD 710101                                  <1>

                                 ***********************************************************
                                 *                                                         *
                                 *              EQUIP-TYPE-DESIG: AM-1017B/SLR             *
                                 *                                                         *
                                 ***********************************************************

0967-286-9010                                                  690501       TECHNICAL MANUAL                                <T>
                                                                            SUP NS92488 0280-338-3000 0967-106-9010         <1>
***            0967-286-9011                          T-1      710401   EIB-794                                             <1>

                                 ***********************************************************
                                 *                                                         *
                                 *              EQUIP-TYPE-DESIG: AM-2123A(V)/U            *
                                 *                                                         *
                                 ***********************************************************
```

SAMPLE FCIP FORM 150

SHIP'S CONFIGURATION CHANGE FORM OPNAV 4790/CK (5-84)

S/N 0107-LF-047-9001

CONFIG FILE CORP	COMP MAINT NO DEFL	COMP DEFL

SECTION I JOB IDENTIFICATION

JOB CONTROL NUMBER			ALTERATION IDENTIFICATION
1 SHIP'S UIC	2 WORK CENTER	3 JOB SEQ NR	4 ALTERATIONS (SHIPALT, FLD CHG, ETC)

A SHIP'S NAME	B HULL NUMBER	5 EIC	6 ACT TKN

7 EQUIPMENT NOUN NAME	8 S/E MHRS EXP	9 ACT MAINT TIME	10 COMP DATE	11 M/R

SECTION II JOB DESCRIPTION/REMARKS

12 JOB DESCRIPTION/REMARKS

SECTION III COMPONENT CONFIGURATION CHANGE IDENTIFICATION

13 COMPONENT NOUN NAME	14 QUANTITY	15 CA

16 COMPONENT IDENTIFICATION	17 COMPONENT SERIAL NUMBER

18 COMPONENT AFL/AEL	19 LOCATION (DECK/FRAME/SIDE)	20 EIC

21 NEXT HIGHER ASSEMBLY	22 S.A.C	23 WORK CENTER

24 NAMEPLATE DATA

25 MIP	26 EOSS

27 TM

SECTION IV SPECIAL PURPOSE

28 RIN	29 AILSIN	30 SECAS OFFICE USE

—INSTRUCTIONS—

ITEM NUMBER	SECTION I & II DESCRIPTION	SECTION I & II PAGE 1	SECTION I & II CONT. PAGE
1-3	JOB CONTROL NUMBER	M	M
4	ALTERATION IDENTIFICATION	IP	IP
5	EQUIPMENT IDENTIFICATION CODE	M	NR
6	ACTION TAKEN	M	NR
7	EQUIPMENT NOUN NAME	M	NR
[illegible]	[illegible]	[illegible]	[illegible]
9	ACTIVE MAINTENANCE TIME	M	NR
10	COMPLETION DATE	M	NR
11	METER READING	IP	NR
12	JOB DESCRIPTION (REMARKS)	O	NR

ITEM NUMBER	SECTION III DESCRIPTION	REMOVE (R/D)	INSTALL (I/A)	MODIFY (M/C)
13	COMPONENT NOUN NAME	M	M	M
14	QUANTITY	M	M	M
15	COMPONENT ACTION	M	M	M
16	COMPONENT IDENTIFICATION	IP	IP	IP
17	COMPONENT SERIAL NUMBER	IA	IA	IA
18	COMPONENT AFL/AEL	M	M	IA
19	LOCATION	M	M	M
20	EQUIPMENT IDENTIFICATION CODE	NR	IA	NR
21	NEXT HIGHER ASSEMBLY	IP	IP	IP
22	SERVICE APPLICATION CODE	IA	IA	IA
23	WORK CENTER	NR	M	NR
24	NAMEPLATE DATA	NR	M	NR
25	MAINTENANCE INDEX PAGE	IA	IA	IA
26	EOSS	IP	IP	IP
27	TECH MANUAL NUMBER	IA	IA	IA

LEGEND

IA	IF AVAILABLE	O	OPTIONAL
IP	IF APPLICABLE	NR	NOT REQUIRED
M	MANDATORY		

SECTION I, BLOCK 6 ACTION TAKEN

5A — PARTIALLY COMPLETED ALTERATION
5B — FULLY COMPLETED ALTERATION
5C — FULLY COMPLETED EQUIVALENT TO ALTERATION
5D — ALTERATION DIRECTIVE NOT APPLICABLE
1 — MAINTENANCE ACTION COMPLETED PARTS DRAWN FROM SUPPLY
2 — MAINTENANCE ACTION COMPLETED REQUIRED PARTS NOT DRAWN FROM SUPPLY (LOCAL MANUFACTURE, PRE EXPENDED BINS)
3 — MAINTENANCE ACTION COMPLETED NO PARTS REQUIRED

SECTION III, BLOCK 15 COMPONENT ACTION

MAINTENANCE ACTIONS

R — REMOVED EQUIPMENT
I — INSTALLED EQUIPMENT
M — MODIFIED EQUIPMENT

CONFIG FILE CORP NO MAINTENANCE ACTION

A — ADDITION OF RECORD
D — DELETION OF RECORD
C — CORRECT/CHANGE EXISTING RECORD

WORK CENTER SUPERVISOR	DIVISION OFF	SUPPLY DEPT	3 M COORDINATOR	SHIP SEQUENCE NUMBER	PAGE ____ OF ____

☆U.S. GOVERNMENT PRINTING OFFICE: 1985 631-017 21032

THIS PAGE INTENTIONALLY LEFT BLANK

OPNAV 4790/2K (Rev. 6-75) S/N 0107-LF-047 9011

SHIP'S MAINTENANCE ACTION FORM (2-KILO)

SECTION I. IDENTIFICATION

JOB CONTROL NUMBER

1. SHIP'S UIC
2. WORK CENTER
3. JOB SEQ. NO.
4. APL/AEL
A. SHIP'S NAME
5. EQUIPMENT NOUN NAME
6 WND | 7. STA | 8. CAS | 9. DFR | 10. | 11. | 12.
B. HULL NUMBER
13. IDENT./EQUIPMENT SERIAL NUMBER
14. EIC
15. SAFETY HAZARD ☐
16. LOCATION (Compartment/Deck/Frame/Side)
17. WHEN DISCOVERED DATE YR DAY

CONFIGURATION CHANGE

18. ALTERATIONS (SHIPALT, ORDALT, Fld Chg, etc.)

FOR INSURV USE

19. */**
20. INSURV NUMBER
21. SUFFIX
22. U
23. S
24. P/F

SECTION II. DEFERRAL ACTION

25. S/F MHRS. EXP.
26. DEFER. DATE YR. DAY
27. S/F MHRS. REM.
28. DEADLINE DATE YR. DAY

SECTION III. COMPLETED ACTION

29. ACT. TKN.
30. S/F MHRS.
31. COMPLETION DATE YR. DAY

FOR SELECTED EQUIPMENTS ONLY

32. ACT. MAINT. TIME
33. TI
34. METER READING

SECTION IV. REMARKS/DESCRIPTION

35. REMARKS/DESCRIPTION

36. CONT. SHEET

37. CSMP SUMMARY

38. FIRST CONTACT/MAINT. MAN (Print)
39. RATE
40. SECOND CONTACT/SUPERVISOR (Print)
41. PRI
42. T/A
43. INTEGRATED PRIORITY

SCREENING

C. DIV. INIT.
D. DEPT. INIT.
E. COMMANDING OFFICER'S SIGNATURE
F. TYCOM AUTHORIZATION
44. IUC
45. TYCOM

46. SPECIAL PURPOSE A. B. C. D. E. F. G. H. I. J. K. L.

SECTION V. SUPPLEMENTARY INFORMATION

47. BLUEPRINTS, TECH. MANUALS, PLANS, ETC.

AVAILABLE ON BOARD YES | NO

48. PREARRIVAL/ARRIVAL CONFERENCE ACTION/REMARKS

SECTION VI. REPAIR ACTIVITY PLANNING/ACTION

49. REPAIR W/C
50. EST. MHRS.
51. ASST. REPAIR W/C
52. ASST. EST. MHRS.
53. SCHED. START DATE YR DAY
54. SCHED. COMP. DATE YR DAY
55. REPAIR ACTIVITY UIC
56. WORK REQ. ROUTINE
57. EST. MANDAYS
58. EST. MANDAY COST $
59. EST. MATERIAL COSTS $
60. EST. TOTAL COST $
61. JOB ORDER NUMBER
62. LEAD P&E CODE
63. DATE OF EST. YR DAY
64. FINAL ACT.
65. MHRS. EXPENDED
66. DATE COMPLETED YR DAY
G. COMPLETED BY (Signature - Rate)
H. ACCEPTED BY (Signature - Rate/Rank)

☆U.S. GOVERNMENT PRINTING OFFICE: 1987-705-583

THIS PAGE INTENTIONALLY LEFT BLANK

APPENDIX I

FIELD CHANGE INSTALLATION PROGRAM

AND

INSTRUCTIONS FOR PREPARATION

OF

SHIPBOARD ACTIVITY REPORT

Field Change Installation Program and Instructions for Preparation of Shipboard Activity Report

1.0 PURPOSE

This appendix is provided to describe the format and contents of the Field Change Installation Project (FCIP) Shipboard Activity Report (SAR) which is prepared and submitted subsequent to completion of a FCIP team visit. It contains instructions regarding the construction and content of the data required in each paragraph or subparagraph in the report. To illustrate these requirements, a completed SAR is provided in this appendix.

2.0 DESCRIPTION OF FCIP SHIPBOARD ACTIVITY REPORT

The SAR is a concise but descriptive record of the work performed by the FCIP team during a visit to a ship or activity. It is preceded by a letter of transmittal. The letter format is shown in the example which precedes the sample SAR.

3.0 FORMAT AND CONTENT.

The FCIP SAR is prepared in the format shown in the example which follows paragraph 4.0 in this appendix. It is submitted as enclosure (1) to the cover letter and contains the following information:

a. TITLE PAGE. The title page contains the nomenclature of the report, the ship's name and hull number as shown on the example SAR, and the dates of the visit in military form.

b. TABLE OF CONTENTS. The table of contents is formatted as shown on page (i) of the example SAR. Note the ship's name and hull number in the upper right corner of the page.

c. SECTION 1.0 SCOPE. The scope presents background data describing the intent and purpose of the visit. The heading shown on page 1 of the example SAR is in the same format as the title page.

d. SUBSECTION PURPOSE. This paragraph explains the purpose of the SAR as shown on page 2 of the example.

e. SUBSECTION 1.2 SUMMARY. This area, beginning on page 3 of the example SAR, summarizes the accomplishments made by the FCIP Technical Team visit to the ship, it contains the Field Change Status Summary (Subsection 1.2.1) and the Logistics Docu-

mentation Summary (Subsection 1.2.2). Subsection 1.2.3 reports on the status of the ship or activity's file of Allowance Parts Lists (APLs), while subsection 1.2.4 summarizes the FCIP teams findings relative to the status of the 3-M data relevant to SPAWAR cognizant equipment. Subsection 1.2.5 discusses the additional support provided by the team such as the installation, or updating of Field Change Record decals or equipment, or the preparation of 3-M forms such as the OPNAV 4790/CK or 4790/2K.

f. SECTION 2.0 RECOMMENDED ACTION. This section provides recommendations to the ship or activity regarding the action required to correct reported deficiencies. See page 6 in the example SAR for the required format.

g. SECTION 3.0 TABLE I, SPAWAR FIELD CHANGE INSTALLATION PROJECT REPORT OF FIELD CHANGE INSTALLATION, FCIP REPORT 160. This report summarizes the field change status of the NAVELEX cognizant equipment after the FCIP team visit. It is compiled from the data on the FCIP Form 110 prepared during the team's visit.

h. SECTION 4.0 TABLE II, SPAWAR FIELD CHANGE INSTALLATION PROJECT REPORT OF TECHNICAL DOCUMENT STATUS, FCIP REPORT 170. This table provides an updated report on the status of the technical support documentation after the FCIP team's visit. It is derived from the data on the FCIP Form 130 prepared during the FCIP team visit.

4.0 CONSOLIDATED PERSONNEL LIST.

An Appendix to the SAR is submitted as enclosure (2) to the cover letter, the consolidated personnel is a list of all FCIP team and ship or activity personnel involved in the evolutions associated with the team visit.

SAMPLE COVER LETTER

(APPROPRIATE LETTERHEAD)

A cover letter normally precedes the completed Shipboard Activity Report submission.

Enclosures: (1) Field Change Installation Program Shipboard Activity Report
(2) Consolidated Personnel List

FIELD CHANGE INSTALLATION PROGRAM
SHIPBOARD ACTIVITY REPORT

FOR

USS CONSTANT (MSO-427)

23 through 27 March 1981

NAVAL ELECTRONIC SYSTEMS ENGINEERING CENTER, SAN DIEGO
4297 PACIFIC HIGHWAY, P.O. BOX 80337
SAN DIEGO, CALIFORNIA 92138

Enclosure (1)

USS CONSTANT (MSO-427)

TABLE OF CONTENTS

SECTION	DESCRIPTION	PAGE
1.0	Scope	I-6
1.1	Purpose	I-7
1.2	Summary	I-7
1.2.1	Field Change Status Summary	I-7
1.2.2	Logistics Documentation Summary	I-8
1.2.3	Allowance Parts List (APL) Summary	I-9
1.2.4	Maintenance and Material Management (3-M) Summary	I-10
1.2.5	Additional Support Provided	I-10
2.0	Recommended Action	I-10
3.0	TABLE I - SPAWAR Field Change Installation Program Report of Field Change Installation FCIP Report 160	I-11
4.0	TABLE II- SPAWAR Field Change Installation Program Report of Technical Document Status FCIP Report 170	I-13

USS CONSTANT (MSO-427)

FIELD CHANGE INSTALLATION PROGRAM
SHIPBOARD ACTIVITY REPORT

FOR

USS CONSTANT (MSO-427)

23 through 27 March 1981

1.0 Scope: The Field Change Installation Program (FCIP) is directed by the Space and Naval Warfare Systems Command, Washington, D.C., and supports the Fleet's 2Z/7G equipments from management points on the East and West coasts. Field Change Technical Teams perform shipboard installation of field changes as team and ship schedules coincide. Ships are selected and scheduled by the appropriate SPAWARSYSENGCEN in San Diego or Charleston in conjunction with the ship's Force Commander. The intent and purpose of each ship visit is described as follows:

Conduct a review to determine the status of all field changes for 2Z/7G equipments comprising each ship's equipment status;

Conduct an operational test on each equipment prior to and following the installation of field changes;

Install all field changes applicable to SPAWAR 2Z/7G equipments (not otherwise deferred) that can be acquired;

Conduct a review and subsequent update of selected 2Z/7G equipment publications;

Review and update the Allowance Parts List (APL) files in the Electronic Shop and Supply Office so that Section "A" and Section "B" properly support the SPAWAR 2Z/7G equipments;

Perform a review of the ship's Maintenance and Material Management (3-M) System, especially the Planned Maintenance Subsystem to ensure proper coverage of the SPAWAR 2Z/7G equipments; and

Update the equipment Field Change Record Decal.

Upon completion of the foregoing objectives, the team will prepare the OPNAV 4790/CK or 4790/2K forms, as appropriate, describing each field change Completed Action or Deferral. The original and one copy will be turned over to the ship to be submitted to the 3-M System and to update the ship's CSMP.

1.1 Purpose: This report describes the work performed during the recent visit by the SPAWAR FCIP. Section 2.0 also recommends actions to be taken by the ship's force to correct deficiencies discovered by the FCIP visit, but not within the scope of the Field Change Team's effort.

Contained in the report are two tables which details the status of field changes for 2Z/7G cognizant equipment as well as the status of supporting technical documents.

1.2 Summary: This section summarizes accomplishments made by the FCIP Technical Team visit to the ship.

1.2.1 Field Change Status Summary: (Reference Section 3.0 Table I.)

USS CONSTANT (MSO-427)

		QTY
1.2.1.1	Total field changes outstanding and applicable: This number represents the composite quantity of FC(s) which were found to be outstanding as a result of the validation effort of the FCIP during the current visit.	17
1.2.1.2	Field changes installed: This number represents the FC(s) installed by the FCIP during the current visit.	12
1.2.1.3	Field changes not installed, but within the scope of the project: This number represents the FC(s) within the capabilities of the FCIP, but are deferred for the various reasons stated in Table I.	5
1.2.1.4	Field changes deferred; beyond scope of the project: This number represents the FC(s) that are to be installed by installation activities other than the FCIP as stated in Table I.	0
1.2.1.5	Field changes for which status could not be determined:	1
1.2.1.6	Manhours (total bulletin MHRS) to install the remaining field changes: (1.2.1.3 & 1.2.1.4)	9
1.2.2	<u>Logistics Documentation Summary:</u> (Reference Section 4.0, Table II.)	
	Technical manuals found on ship: (QOB) (NAVELEX COG equipment only)	132
	Technical manuals provided to the ship: (PBT)	38
	Changes incorporated into technical manuals by FCIP: (PBT)	88
	Technical manuals required, but not found onboard nor provided by the team: (MANUAL-QSR)	44
	Changes still required: (CHANGES-QSR)	14

1.2.3 Allowance Parts List (APL) Summary

Electronic Shop APL(s)

	YES	NO
Section "A" Reviewed	X	
*Revised	X	
Has hard copy	X	
Has microfiche dated:		X
Missing for following equipments:	AN/SRC-1	

*Revisions were accomplished by pen and ink correction.

	YES	NO
Section "B" Reviewed		X
Revised		X
Has hard copy		X
Has microfiche date:		X

The Electronic Shop does not have Section "B" in any form.

Supply Office APL(2)

	YES	NO
Section "A" Reviewed	X	
*Revised	X	
Has hard copy	X	
Has microfiche dated:		X
Missing for following equipments:	AN/SRC-21	

*Revisions were accomplished by pen and ink correction.

	YES	NO
Section "B" Reviewed	X	
Revised	X	
Has hard copy		X
Has microfiche date: JUNE 1979	X	
Missing for following equipments:		

AN/SRN-12	AN/URT-23A(V)	AN/WRC-1
AN/SSR-1	AN/URT-24	AN/UCC-1D(V)
AN/UGC-6K		

*Revisions were accomplished by insertion of correction cards in the pages of the microfiche.

1.2.4 Maintenance and Material Management (3-M) Summary

Subparagraphs 1.2.4.1 and 1.2.4.2 summarize equipment coverage discrepancies for the 3-M System including the Planned Maintenance Subsystem (PMS).

a. As a result of field changes installed during this visit, the 3-M System, including its Planned Maintenance Subsystem (PMS), requires revised coverage for the following equipment:

AN/PRC-41 AN/URT-23A(V)

b. The following equipment is completely missing PMS coverage:

AN/PRC-96 AN/URA-38A AT-150/SRC
AN/UCC-1D(V)

1.2.5 Additional Support Provided

1.2.5.1 A quantity of 164 field changes was validated by the FCIP team. The appropriate Field Change Record Decal was also updated on each equipment that was validated.

1.2.5.2 The required OPNAV 4790/CKs were prepared and turned over to ship's force for submission to the 3-M System and to update the ship's CSMP and SECAS.

2.0 Recommended Action

The ship should initiate the action necessary to correct the deficiencies reported in the following paragraphs.

2.1 The missing Section "A" and "B" coverage for APLs, as described in paragraph 1.2.3, should be acquired.

2.2 The missing 3-M coverage, as described in paragraph 1.2.4, should be acquired as soon as possible.

2.3 Software material that remains outstanding is described by stock number in the Quantity Still Required (QSR) columns of Table II (Technical Document Status). This material should be acquired at the earliest possible time.

SECTION 3.0

TABLE I

SPAWAR Field Change Installation Program Report

of

Field Change Installation

FCIP Report 160

FCIP 160 - FIELD CHANGE INSTALLATION - POST VISIT
- This report is an update of the FCIP 110. After the shipfile has been
- updated with the information, it becomes part of the SHIPBOARD ACTIVITY
- REPORT - (Copy is forwarded to the ship.)

FC160
UIC: 03341
FOR VISIT DATE: 870911

SPAWAR FIELD CHANGE INSTALLATION PROGRAM
REPORT OF FIELD CHANGE STATUS FOR THE
USS CONSTANT MSO 427

DEC 3, 1987
PAGE: 14

EQUIPMENT SERIAL NUMBER	** FIELD CHANGE ** NUMBER	STATUS
AN/URT-23(V)		
A267	1	N/A - APPLICABLE TO AN/SSQ-54 - OBSOLETE
	2	RE-INSTALLED
	3	PREVIOUSLY INSTALLED
	4	PREVIOUSLY INSTALLED
	5	RE-INSTALLED
	6	PREVIOUSLY INSTALLED
	7	PREVIOUSLY INSTALLED
	8	N/A - APPLICABLE TO ALL S/N OF EARLY VERSIONS OF T-8278/URT
	9	PREVIOUSLY INSTALLED
	10	PREVIOUSLY INSTALLED
	11	PREVIOUSLY INSTALLED
	12	N/A - APPLICABLE TO ALL S/N USING PP-3947/UR
	13	N/A - APPLICABLE TO ALL"A" & "B" SERIAL NUMBERS (WHEN FACTORY RELAY FAILS)
	14	PREVIOUSLY INSTALLED
	15	N/A - APPLICABLE TO ALL S/N USED WITH PP-3947/UR
	16	PREVIOUSLY INSTALLED
	17	PREVIOUSLY INSTALLED
	18	N/A - APPLICABLE TO ALL "B" PREFIXED S/N (DEVIATION-SUBS)
	19	APPLICABLE NOT INSTALLED DEFERRED, SEE PARA 2.0 - REPORT
	20	PREVIOUSLY INSTALLED
	21	N/A - APPLICABLE TO ALL "B" SERIAL NUMBERS WITH T-8270/URT
A277	1	N/A - APPLICABLE TO AN/SSQ-54 - OBSOLETE
	2	PREVIOUSLY INSTALLED
	3	PREVIOUSLY INSTALLED
	4	PREVIOUSLY INSTALLED
	5	PREVIOUSLY INSTALLED
	6	PREVIOUSLY INSTALLED
	7	PREVIOUSLY INSTALLED
	8	N/A - APPLICABLE TO ALL S/N OF EARLY VERSIONS OF T-8278/URT
	9	PREVIOUSLY INSTALLED
	10	PREVIOUSLY INSTALLED
	11	PREVIOUSLY INSTALLED
	12	N/A - APPLICABLE TO ALL S/N USING PP-3947/UR
	13	N/A - APPLICABLE TO ALL"A" & "B" SERIAL NUMBERS (WHEN FACTORY RELAY FAILS)
	14	PREVIOUSLY INSTALLED
	15	N/A - APPLICABLE TO ALL S/N USED WITH PP-3947/UR
	16	PREVIOUSLY INSTALLED
	17	PREVIOUSLY INSTALLED

SECTION 4.0

TABLE II

NAVELEX Field Change Installation Program Report

of

Technical Document Status

FCIP Report 170

FCIP 170 - DOCUMENTATION POST-VISIT
- This report is an update of the FCIP 130. After the ship file has been
- updated with this information, it is used in the Shipboard Activity Report.

FCIP170
SHIP UIC: 04686

SPAWAR FIELD CHANGE INSTALLATION PROGRAM
REPORT OF TECHNICAL DOCUMENT STATUS FOR THE
USS CONSTANT MSO 427

REPORT DATE: 07/27/84
PAGE 5

MANUAL DESIGNATION	ISSUE	QOB	PBT	QSR	TYPE	CHANGE DESIGNATION	QPI	PBT	QSR
AN/URR-27									
0967-118-2010		1	1	0					
TECHNICAL MANUAL W/CH-1 INC & T-3 & T-4					CH-1	CH-1 TO NS91771	0	2	0
					T-3	T-3 TO NS91771	0	2	0
					T-4	T-4 TO NS91771	0	2	0
0967-118-2011		1	0	0					
OPERATORS HANDBOOK									
0967-118-2012		0	2	0					
MAINTENANCE PARTS CATALOG									
0967-118-2020		0	1	0					
PERFORMANCE STANDARDS SHEET									
0967-118-2030		3	0	0					
MAINTENANCE STANDARDS BOOK W/T-1					EIB	EIB-969(URR-27)	2	0	0
					T-1	T-1 TO NS91771.42	3	0	0
AN/URT-23(V)									
0967-879-5010		3	0	0					
TECHNICAL MANUAL					CH-1	0967-879-5016	1	1	0
					EIB	EIB-018(URT-23(V))	0	2	0
0967-879-5020		0	1	0					
OPERATING INSTRUCTIONS CHART									
0967-879-5030		3	0	0					
PERFORMANCE STANDARDS SHEET									
0967-879-5040		3	0	0					
MAINTENANCE STANDARDS BOOK INCLUDES PSS					CH-1	0967-879-5041	0	1	0
EE150-FV-MSB-010/E110		1	0	0					
MAINTENANCE STANDARDS BOOK									
EE150-FV-OIC-010/E110		0	0	1					
OPERATING INSTRUCTIONS CHART									
EE150-FV-OMI-010/E110		0	0	1					
OPERATION & MAINTENANCE INSTRUCTIONS W/PL									
EE150-FV-PSS-010/E110		1	0	0					
PERFORMANCE STANDARDS SHEET									
AN/URT-23A(V)									
0967-456-9010		1	1	0					
TECH MNL OPN & MAINT INSTR W/ERRATA					CH-1	0967-456-9011	1	0	1
					CH-2	0967-456-9012	0	2	0
					CH-3	0967-456-9013	0	2	0
					ERRATA	ERRATA(URT-23A(V))	0	2	0
0967-456-9020		0	0	1					
OPERATING INSTRUCTIONS CHART									
0967-456-9030		0	1	0					
PERFORMANCE STANDARDS SHEET									
0967-456-9040		0	1	0					
MAINTENANCE STANDARDS BOOK					CH-1	0967-456-9041	0	1	0
AN/URT-7D									
0967-071-0010		1	1	0					
TECHNICAL MANUAL									